Ministère de l'Éducation

Ontario

Le curriculum de l'Ontario
11e et 12e année

RÉVISÉ

English

2007

CONTENTS

INTRODUCTION 3

Les écoles secondaires au XXIe siècle 3
L'école de langue française 3
La place du programme-cadre d'English dans le curriculum 5
Le rôle de l'élève 6
Le rôle des parents 6
Le rôle de l'enseignante ou l'enseignant 7
Le rôle de la directrice ou du directeur d'école 8

CONSIDÉRATIONS CONCERNANT LA PLANIFICATION DU PROGRAMME 9

Les stratégies d'enseignement et d'apprentissage 9
Les habiletés de la pensée et de la recherche 10
L'importance de l'actualité 10
La planification des cours d'English destinés aux élèves en difficulté 10
L'éducation antidiscriminatoire dans le programme d'English 13
La littératie et la numératie 14
Le rôle du centre de ressources dans le programme d'English 15
La place des technologies dans le programme d'English 15
La majeure haute spécialisation 16
La planification de carrière 17
Le Passeport-compétences de l'Ontario et les compétences essentielles 17
L'éducation coopérative et les autres formes d'apprentissage par l'expérience 18
La santé et la sécurité 19

THE PROGRAM IN ENGLISH 20

Overview of the Program 20
Curriculum Expectations 23
Strands in the Core English Curriculum 24

Cette publication est affichée sur le site Web du ministère de l'Éducation
au www.edu.gov.on.ca.

ASSESSMENT AND EVALUATION OF STUDENT ACHIEVEMENT 29

Basic Considerations 29
The Achievement Chart for English 31
Evaluation and Reporting of Student Achievement 36
Reporting on Demonstrated Learning Skills 36

CORE COURSES 37

English, Grade 11, University Preparation (EAE3U) 39
English, Grade 11, College Preparation (EAE3C) 47
English, Grade 11, Workplace Preparation (EAE3E) 55
English, Grade 12, University Preparation (EAE4U) 63
English, Grade 12, College Preparation (EAE4C) 73
English, Grade 12, Workplace Preparation (EAE4E) 83

OTHER COURSES 91

Canadian Literature, Grade 11, University/College Preparation (EAT3M) 93
Communication in the World of Business and Technology, Grade 11, Open (EAB3O) 99
English Literature, Grade 12, University Preparation (EAL4U) 105
The Writer's Craft, Grade 12, University Preparation (EAC4U) 111
The Writer's Craft, Grade 12, College Preparation (EAC4C) 117

GLOSSARY 123

INTRODUCTION

Le présent document *Le curriculum de l'Ontario – English, 11e et 12e année, Révisé, 2007* est destiné aux écoles de langue française; il remplace le document *Le curriculum de l'Ontario – English, 11e et 12e année, 1999*. À compter de septembre 2007, tout le programme d'English, de 11e et 12e année, sera fondé sur les attentes et les contenus d'apprentissage énoncés dans les pages suivantes.

LES ÉCOLES SECONDAIRES AU XXIe SIÈCLE

Les écoles secondaires de l'Ontario offrent à tous les élèves un programme d'études varié et planifié de grande qualité. Ce programme vise la réussite de tous les élèves dans la destination de leur choix. La mise à jour du curriculum de l'Ontario, de pair avec un élargissement des options d'apprentissage offertes à l'extérieur de la salle de classe, intègre l'apprentissage des compétences essentielles pour réussir au XXIe siècle et respecte les champs d'intérêt, les points forts ainsi que les besoins des élèves.

L'ÉCOLE DE LANGUE FRANÇAISE

À l'école secondaire de langue française, un apprentissage de qualité se déroule dans un environnement propice à la construction de l'identité francophone. En effet, s'éveiller et s'ouvrir à la francophonie, prendre conscience de ses enjeux, identifier ses caractéristiques, s'y engager avec fierté et contribuer à la vitalité de ses institutions, tout cela correspond sans aucun doute à la plus-value de l'apprentissage proposé.

À l'appui du mandat de l'école de langue française, la *Politique d'aménagement linguistique de l'Ontario pour l'éducation en langue française, 2004* définit la nature et la portée des interventions en aménagement linguistique ainsi que les résultats escomptés. Ces résultats sont de trois ordres.

- Pour les élèves : capacité accrue à acquérir les compétences en communication orale afin de maximiser l'apprentissage et la construction identitaire.
- Pour le personnel scolaire : capacité accrue à œuvrer en milieu minoritaire afin d'appuyer les apprentissages scolaires et le développement identitaire de chaque élève.
- Pour les conseils scolaires : capacité accrue à maintenir et à augmenter l'effectif scolaire afin de contribuer à la vitalité des écoles de langue française et de la communauté francophone.

Lors de la planification des activités d'enseignement et d'apprentissage, le personnel enseignant de l'école conçoit des interventions en aménagement linguistique qui réunissent les conditions favorables à la création d'un espace francophone respectueux

du dynamisme et du pluralisme de la communauté et qui contrent les effets négatifs du contexte anglo-dominant sur la réussite des élèves. De cette manière, l'école devient un milieu de bilinguisme additif qui permet d'acquérir de solides compétences langagières en français à l'oral et à l'écrit. Elle invite les élèves à prendre conscience des avantages de maîtriser les deux langues officielles du Canada. Les élèves utilisent leur capacité à communiquer oralement en français pour apprendre à se connaître, à construire leur identité, à apprendre avec les autres et à faire état de leurs apprentissages.

La politique d'aménagement linguistique de l'Ontario (PAL) comporte, entre autres, deux axes d'intervention qui ciblent la réussite scolaire et le développement de la personne.

L'axe de l'apprentissage. Cet axe d'intervention porte sur l'appropriation des savoirs et le choix de carrière. Le curriculum de l'Ontario définit les compétences transdisciplinaires que tous les élèves doivent acquérir pour évoluer comme francophones dans la vie et dans la société, c'est-à-dire savoir communiquer oralement, savoir lire, savoir écrire, savoir rechercher l'information, savoir se servir des technologies de l'interaction et savoir exercer une pensée critique. Garante de la réussite scolaire, l'acquisition de ces compétences de base se fait graduellement et en parallèle avec la découverte des champs d'intérêt et des talents individuels qui amènera chaque élève à définir son rôle dans la société et à choisir son domaine d'activité professionnelle.

L'axe de la construction identitaire. Cet axe d'intervention porte sur l'appropriation de la culture et le développement de l'identité. En approfondissant sa connaissance du français, l'élève acquiert un ensemble de repères culturels qui lui permettent d'interpréter le monde et de découvrir les traits distinctifs et les manifestations de la francophonie sur le plan matériel et intellectuel. Chez l'élève, ce cheminement culturel vient encadrer sa démarche de construction identitaire qui s'opère en trois étapes interreliées : *l'ouverture et le constat* où l'élève s'éveille au milieu environnant et à la réalité culturelle francophone, *l'expérience* où l'élève prend contact de façon approfondie et plus active avec les contextes socioculturels et *l'affirmation* où l'élève fait des choix déterminants pour s'engager et affirmer son identité.

Puisqu'une langue sert de véhicule à la culture, l'école doit aussi s'assurer de créer des situations d'apprentissage qui permettront aux élèves d'affirmer leur identité comme francophones. Les attentes du curriculum de l'Ontario visent le cheminement de l'élève sur les plans personnel, interpersonnel et professionnel. En incitant les élèves à échanger sur les apprentissages et à les mettre en relation avec leurs émotions, leurs valeurs et leurs connaissances antérieures, on développe simultanément chez l'élève l'expression de la pensée et le courage d'exposer un point de vue et de le confronter à d'autres avec mesure et tolérance. Ainsi, les attentes constituent un tremplin à partir duquel l'élève peut construire son identité tout en perfectionnant ses compétences linguistiques.

En instaurant dans la salle de classe une ambiance collégiale et respectueuse des divers niveaux d'habiletés linguistiques et des différences culturelles, on contribue à rehausser l'estime de soi et à construire une identité forte et engagée chez les élèves.

Finalement, les expériences vécues dans le milieu communautaire et les expériences de travail prévues dans les cours du présent document offrent d'excellentes occasions pour que l'élève s'engage dans des activités sociales, communautaires ou culturelles et consolide ses liens avec la communauté.

LA PLACE DU PROGRAMME-CADRE D'ENGLISH DANS LE CURRICULUM

Le programme-cadre d'English offert dans les écoles de langue française de l'Ontario est stimulant, rigoureux et à la fine pointe du progrès technologique en matière de communication pour permettre aux élèves d'acquérir de solides compétences langagières en anglais. Ainsi préparés, les élèves seront en mesure de participer pleinement à la société canadienne et au monde du travail du XXIe siècle. Le programme-cadre d'English reconnaît non seulement l'importance de l'anglais dans l'apprentissage et la vie de tous les jours, mais il vise aussi à susciter chez les élèves un intérêt soutenu à l'égard de la lecture et de l'écriture dans la langue anglaise.

Pour satisfaire aux conditions d'obtention du diplôme d'études secondaires, les élèves des écoles de langue française doivent compter un crédit d'English au nombre des 18 crédits obligatoires. Deux cours additionnels d'English peuvent aussi être reconnus en tant que crédits obligatoires. Selon leur niveau de compétences en anglais, les élèves peuvent remplacer les cours d'English par des cours d'anglais pour débutants.

La langue étant à la base de la pensée, de la communication et de l'apprentissage, les élèves ont besoin de fortes compétences en communication orale, en lecture et en écriture pour pouvoir extraire, interpréter et comprendre de l'information et des idées, approfondir leurs domaines d'intérêt et d'étude, s'exprimer clairement et faire preuve de leur apprentissage. Les compétences en anglais sont importantes pour entreprendre des études postsecondaires, suivre des programmes d'apprentissage et accéder au marché du travail. Ces compétences langagières sont d'autant plus importantes pour les élèves qui planifient faire des études collégiales ou universitaires. Elles sont aussi essentielles pour pouvoir s'adapter au monde du travail en constante évolution. Quelle que soit leur destination postsecondaire, tous les élèves doivent pouvoir réfléchir de manière critique et créative et s'exprimer clairement et efficacement en anglais. En apprenant à communiquer en anglais avec clarté et précision, tant à l'oral qu'à l'écrit, ils seront davantage en mesure de réussir ce qu'ils entreprendront après leurs études secondaires.

En lisant et en interprétant une grande diversité d'œuvres littéraires et de textes courants et médiatiques rédigés en anglais et en réfléchissant sur ceux-ci, les élèves approfondissent leur compréhension du Canada anglophone et du monde qui les entoure. En outre, en étudiant des textes littéraires d'auteurs réputés représentant une variété de genres, de périodes historiques et de cultures, les élèves peuvent ainsi examiner des aspirations personnelles et sociales diverses et explorer une foule de possibilités. Grâce à l'étude de la littérature d'expression anglaise dans les cours d'English et d'expression française dans les cours de français, les élèves qui fréquentent les écoles de langue française peuvent renforcer leur capacité à utiliser les deux langues officielles du pays et en faire des outils efficaces sur le plan de la pensée, de l'expression et de la communication.

Les élèves qui fréquentent les écoles de langue française de l'Ontario proviennent de divers milieux culturels et linguistiques. Leur degré de compétence en anglais peut donc varier considérablement. Aussi faut-il tenir compte de cette diversité linguistique et culturelle au moment de choisir les ressources et les approches pédagogiques. Les élèves qui n'ont pas ou qui n'ont que très peu de connaissances en anglais doivent suivre les cours d'anglais pour débutants afin d'acquérir les connaissances de base suffisantes pour suivre un cours d'English. Le but de ces cours d'anglais pour débutants est expliqué à la page 23 et les cours sont décrits en détail dans un programme-cadre distinct.

Les capacités langagières s'acquièrent de manière cumulative, entre autres, en lisant, en écrivant, en discutant de thèmes ou questions et en y réfléchissant. L'emploi de la langue à diverses fins permet aux élèves d'augmenter à la fois leur capacité à communiquer avec précision et leur compréhension du fonctionnement de la langue. Au fil du temps, les élèves comprennent et utilisent la langue avec une aisance et une compétence accrues. On s'attend aussi à ce qu'ils assument la responsabilité de leur apprentissage et à ce qu'ils mettent en pratique leurs capacités langagières dans des contextes plus exigeants et de manière plus complexe.

LE RÔLE DE L'ÉLÈVE

Face à la diversité des possibilités d'apprentissage que l'école lui propose, l'élève a la responsabilité de s'engager résolument et de faire les efforts nécessaires pour réussir. C'est en prenant conscience de ses progrès et du développement de ses habiletés que l'élève sera amené à croire en sa réussite et trouvera la motivation pour assumer cette responsabilité et persévérer dans ses apprentissages. Tous les élèves doivent pouvoir compter sur l'appui et la sollicitude du personnel enseignant et, dans certains cas, sur un soutien supplémentaire.

La maîtrise des connaissances et des habiletés propres au programme d'English requiert de la part de l'élève un engagement sincère. L'élève devrait saisir toutes les occasions possibles en dehors de la classe pour mieux maîtriser les processus de communication. En outre, il importe que l'élève s'implique activement dans ses apprentissages, fournisse les efforts nécessaires, comprenne que patience et persévérance vont de pair avec l'apprentissage et fasse preuve de collaboration et d'esprit d'équipe.

LE RÔLE DES PARENTS

Le rôle des parents[1] dans l'éducation de leur enfant consiste principalement à connaître le curriculum, à accompagner leur enfant dans son apprentissage et à faire du foyer un milieu d'apprentissage et un lieu d'épanouissement culturel.

Connaître le curriculum. L'élève a tendance à fournir un meilleur rendement scolaire lorsque ses parents s'intéressent à ses études. S'ils se familiarisent avec les programmes-cadres du curriculum, les parents sauront quelles sont les connaissances, les habiletés et les compétences que leur enfant doit acquérir dans chaque cours. Ils pourront mieux suivre les progrès scolaires de leur enfant et en discuter en connaissance de cause. Cela leur permettra aussi de collaborer plus étroitement avec l'enseignante ou l'enseignant en vue d'améliorer le rendement scolaire de leur enfant.

Accompagner leur enfant dans son apprentissage. Les parents peuvent manifester leur intérêt pour l'apprentissage de leur enfant de bien des façons, par exemple, en l'encourageant à faire ses travaux, en assistant aux réunions de parents ou en s'assurant qu'il peut faire ses travaux dans un endroit adéquat et dispose de ressources appropriées. En ce qui concerne le présent programme-cadre, les parents peuvent insister sur l'importance du bilinguisme en encourageant leur enfant dans son étude de la langue anglaise tout en valorisant son héritage francophone. Les parents peuvent aussi s'intéresser aux lectures, aux projets de recherche, aux activités de rédaction et de création de textes en posant des questions qui exigeront de leur enfant une réflexion critique par rapport à ses travaux.

1. Dans le présent document, le terme *parents* désigne aussi les tutrices et tuteurs.

Faire du foyer un milieu d'apprentissage. Les parents peuvent encourager leur enfant à participer à des activités qui élargiront ses horizons, enrichiront sa compréhension du monde et développeront son esprit critique, qu'il s'agisse de discuter de questions d'actualité traitées dans un bulletin de nouvelles télévisé ou dans l'éditorial du journal régional, de lui proposer un roman à lire ou de l'inviter à un débat public ou à une conférence sur un sujet qui l'intéresse.

Faire du foyer un lieu d'épanouissement culturel. L'appui des parents est essentiel pour favoriser chez leur enfant le développement de l'identité francophone. Le fait de parler français à la maison, de prévoir des activités culturelles et récréatives en français, d'offrir des ressources en français à l'enfant renforcera le travail éducatif accompli à l'école de langue française. Cela aidera l'enfant à mieux réussir à l'école et à s'identifier plus étroitement à la culture d'expression française, dans toute la diversité de ses manifestations.

LE RÔLE DE L'ENSEIGNANTE OU L'ENSEIGNANT

Le rôle de l'enseignante ou l'enseignant, qui consiste à appuyer chaque élève dans sa réussite, s'articule ainsi : créer un milieu d'apprentissage convivial pour l'élève, lui proposer des activités pertinentes et enseigner l'anglais dans un contexte d'aménagement linguistique en français.

Créer un milieu d'apprentissage convivial pour l'élève. L'enseignante ou l'enseignant a pour tâche d'élaborer une gamme de stratégies d'enseignement et d'évaluation fondées sur une pédagogie éprouvée. Il lui faut concevoir des stratégies qui tiennent compte des différents styles d'apprentissage et les adapter pour répondre aux divers besoins de ses élèves. Ces stratégies devraient aussi viser à insuffler à chaque élève le désir d'apprendre et à maintenir sa motivation à donner son plein rendement.

Proposer des activités pertinentes pour l'élève. L'enseignante ou l'enseignant fait des liens entre la théorie et la pratique et conçoit des activités fondées sur un apprentissage actif. Miser sur le connu et le concret amène l'élève à découvrir et à intégrer les concepts à l'étude par l'entremise du questionnement, de la recherche, de l'observation et de la réflexion. L'enseignante ou l'enseignant l'encouragera à situer ces concepts dans un contexte qui lui permettra d'en voir clairement la pertinence et l'application dans le monde qui l'entoure.

Enseigner l'anglais dans un contexte d'aménagement linguistique en français. La politique d'aménagement linguistique de l'Ontario reconnaît l'importance et l'avantage du bilinguisme pour les élèves des écoles de langue française de l'Ontario. Cependant, le bilinguisme présente aussi un risque fondamental, c'est-à-dire la perte graduelle de la langue minoritaire, soit le français. Il est donc essentiel que l'enseignement de l'anglais soit présenté dans le contexte d'un bilinguisme additif, en maintenant un équilibre entre l'apprentissage de l'anglais et du français. Il faut offrir à l'élève un milieu linguistique cohérent, où tout contribue d'abord à enrichir ses compétences linguistiques en français, à capitaliser sur celles-ci pour ensuite favoriser un transfert de ces connaissances vers l'anglais. Pour les élèves qui ont déjà une bonne connaissance de l'anglais ou d'autres langues, il s'agit de bien valoriser celles-ci pour favoriser un transfert linguistique vers le français.

LE RÔLE DE LA DIRECTRICE OU DU DIRECTEUR D'ÉCOLE

De concert avec divers intervenants, la directrice ou le directeur d'école prendra les mesures nécessaires pour fournir la meilleure expérience scolaire possible à tous les élèves et leur donner les moyens de connaître le succès et d'assumer leurs responsabilités sur le plan personnel, civique et professionnel. Il lui incombe aussi de veiller à la mise en œuvre du curriculum de l'Ontario dans sa totalité et dans le respect des différents styles d'apprentissage des élèves et, pour ce faire, de s'assurer que les élèves et le personnel enseignant disposent des ressources nécessaires, y compris en matière de perfectionnement professionnel pour favoriser l'excellence de l'enseignement.

La directrice ou le directeur d'école doit valoriser et favoriser l'apprentissage sous toutes ses formes, à l'école comme dans le milieu communautaire. Il lui appartient en outre de concevoir des mesures pour appuyer l'épanouissement d'une culture d'expression française, en conformité avec la politique d'aménagement linguistique du conseil scolaire. À cet égard, la directrice ou le directeur d'école travaille en collaboration avec divers intervenants pour créer une communauté apprenante qui constituera un milieu communautaire où il fait bon vivre et apprendre en français.

La directrice ou le directeur d'école a la responsabilité de s'assurer que l'élève qui a un plan d'enseignement individualisé (PEI) obtienne les adaptations et les changements décrits dans son PEI. Il lui incombe aussi de voir à l'élaboration, à la mise en œuvre et au suivi du PEI.

CONSIDÉRATIONS CONCERNANT LA PLANIFICATION DU PROGRAMME

L'enseignante ou l'enseignant doit planifier son cours d'English en tenant compte de certaines considérations, notamment celles qui sont présentées ci-dessous.

LES STRATÉGIES D'ENSEIGNEMENT ET D'APPRENTISSAGE

L'élève apprend mieux lorsqu'on lui offre un éventail d'activités d'apprentissage. Il faudrait privilégier les approches qui encouragent l'élève à faire des recherches, à développer son esprit critique, à travailler en équipe et à proposer des solutions à des préoccupations dans son milieu. Ces approches favorisent un apprentissage actif qui permet à l'élève de mieux assimiler les notions présentées et d'appliquer les connaissances et les habiletés acquises à des problèmes et à des situations de la vie réelle et, ce faisant, de développer ses propres compétences. Cet apprentissage se combine bien à l'apprentissage coopératif en petits groupes. L'enseignante ou l'enseignant pourrait inviter les élèves à travailler en équipe pour discuter des différentes stratégies possibles pour résoudre un problème. Afin d'encourager la tenue d'un dialogue constructif, l'enseignante ou l'enseignant pourrait aussi tenir des séances de révision de texte avec toute la classe, organiser des cercles de lecture et inviter des personnes de l'extérieur ou des élèves plus âgés à examiner avec le groupe classe des questions actuelles. Lorsque les interactions sont nombreuses et diversifiées à l'intérieur de la classe, les enseignantes et enseignants sont davantage en mesure d'examiner les résultats de l'apprentissage des élèves. Il ne faudrait pas cependant négliger les travaux individuels, qui permettent une réflexion personnelle chez l'élève.

L'enseignante ou l'enseignant qui planifie son enseignement devrait miser sur des activités adaptées à son groupe classe pour favoriser chez les élèves l'acquisition des connaissances et des habiletés dont ils ont besoin pour faire les applications et les transferts appropriés et effectuer des recherches de plus en plus complexes. Il n'y a pas une seule façon d'enseigner et d'apprendre l'anglais. Ce programme-cadre exige l'utilisation d'une variété de stratégies en salle de classe, tel l'entraînement à la manipulation des outils de travail, depuis le maniement des objets à lire jusqu'à celui de la langue elle-même. L'enseignante ou l'enseignant réservera aussi du temps pour s'adonner avec les élèves à l'objectivation à la suite de chaque activité d'apprentissage, cette pratique faisant partie intégrante de la démarche pédagogique.

La création d'un milieu d'enseignement et d'apprentissage stimulant et engageant pour les garçons comme pour les filles est important. L'enseignante ou l'enseignant prendra en compte le mode d'apprentissage selon le genre dans le choix des activités, des interventions, des ressources et des projets afin que chaque élève, garçon ou fille, puisse développer un rapport positif au langage et au savoir et apprendre à sa manière selon ses préférences.

L'apprentissage de l'anglais contribue au développement des connaissances et des habiletés liées à la littératie. Les enseignantes et enseignants s'assureront que les élèves sont exposés à une variété d'occasions d'expérimenter avec la langue et avec le savoir, en insistant sur un enseignement pluridisciplinaire.

LES HABILETÉS DE LA PENSÉE ET DE LA RECHERCHE

Dans les cours d'English, l'élève développe sa capacité à formuler des questions et à planifier les recherches nécessaires pour y répondre. On lui apprend diverses méthodes utiles en recherche et comment choisir celles qui sont adaptées à une recherche particulière. L'élève saura comment tirer des renseignements pertinents de sources imprimées (p. ex., livres, journaux, entrevues, diagrammes, illustrations) et médiatiques (p. ex., Internet, télévision, radio), et dégager des perspectives d'avenir. Avec le temps et l'expérience, l'élève utilisera ces sources d'une manière de plus en plus précise et approfondie et fera la distinction entre sources primaires et sources secondaires pour déterminer leur validité et leur pertinence et pour en tirer profit de manière adéquate. Ceci est particulièrement vrai en ce qui a trait aux sources électroniques.

L'IMPORTANCE DE L'ACTUALITÉ

Les discussions qui portent sur les événements courants, en particulier ceux qui touchent la communauté francophone, suscitent non seulement l'intérêt de la classe élèves, mais aident aussi l'élève à comprendre son monde, à saisir la relation qui existe entre les événements du passé et les situations d'aujourd'hui et à esquisser des perspectives d'avenir. L'étude de questions d'actualité, qu'il s'agisse du réchauffement de la planète, des revendications des peuples autochtones ou de la présence majoritaire des femmes dans les établissements d'enseignement universitaire, ne doit pas être présentée comme un sujet à part dans le programme, mais doit être intégrée à l'étude des contenus d'apprentissage dont ces événements sont l'extension.

LA PLANIFICATION DES COURS D'ENGLISH DESTINÉS AUX ÉLÈVES EN DIFFICULTÉ

Les enseignantes et enseignants sont les principaux intervenants en matière d'éducation des élèves en difficulté puisqu'il leur incombe d'aider tous les élèves à apprendre. À cette fin, ils travaillent en collaboration avec le personnel enseignant responsable de l'éducation de l'enfance en difficulté pour atteindre cet objectif. Le rapport intitulé *Transformation de l'éducation de l'enfance en difficulté : Rapport des coprésidentes avec les recommandations de la Table de concertation sur l'éducation de l'enfance en difficulté, 2006* a approuvé une série de principes sur lesquels devrait reposer l'ensemble de la planification des programmes destinés aux élèves en difficulté. Ces principes directeurs sont repris du rapport intitulé *L'éducation pour tous* de la Table ronde des experts pour l'enseignement en matière de littératie et de numératie pour les élèves ayant des besoins particuliers de la maternelle à la 6e année. Le personnel enseignant qui planifie les cours d'English devrait y accorder une attention particulière.

La planification des programmes destinés aux élèves en difficulté devrait reposer sur les grands principes exposés dans le rapport précité; les sept énoncés suivants en précisent le contenu :

- Tous les élèves peuvent réussir.
- La conception universelle de l'apprentissage et la pédagogie différenciée sont des moyens pour répondre aux besoins d'apprentissage et de réussite de tout groupe d'élèves.
- Des pratiques réussies d'enseignement s'appuient sur les recherches et les expériences vécues.
- Les enseignantes et enseignants sont les acteurs clés pour l'acquisition de la littératie et de la numératie par les élèves.
- Chaque enfant possède son propre style d'apprentissage.
- Le personnel enseignant a besoin de l'appui de la communauté pour créer un milieu d'apprentissage favorable aux élèves ayant des besoins particuliers.
- Chaque élève est unique.

Dans toute salle de classe, les élèves peuvent présenter toute une série de styles et de besoins d'apprentissage. Le personnel enseignant prévoit des programmes qui tiennent compte de cette diversité et confie aux élèves des tâches qui correspondent à leurs habiletés précises pour que tous les élèves profitent au maximum du processus d'enseignement et d'apprentissage. Le recours à des groupes souples dans le cadre de l'enseignement et l'évaluation continue constituent des composantes importantes des programmes qui tiennent compte de la diversité des besoins d'apprentissage.

Au moment de la planification du programme d'English à l'intention de l'élève en difficulté, le personnel enseignant devrait commencer par examiner le niveau de rendement actuel de l'élève, ses points forts et ses besoins d'apprentissage, de même que les connaissances et les habiletés qui sont attendues de la part des élèves à la fin du cours, afin de déterminer laquelle des options suivantes est la plus appropriée :

- aucune adaptation[2] ni modification;
- adaptations seulement;
- attentes modifiées et adaptations au besoin;
- attentes différentes – qui ne découlent pas des attentes prescrites des cours d'English faisant partie du présent programme-cadre.

Si l'élève requiert des adaptations, des attentes modifiées ou une combinaison des deux, il faut consigner, dans son plan d'enseignement individualisé (PEI), les renseignements pertinents qui figurent dans les paragraphes ci-dessous. On trouvera des renseignements plus détaillés sur la planification des programmes pour l'enfance en difficulté dans le document intitulé *Plan d'enseignement individualisé – Guide, 2004* (appelé ci-après *Guide du PEI, 2004*). Pour en savoir davantage sur les exigences du ministère de l'Éducation sur les PEI, veuillez consulter le document intitulé *Plan d'enseignement individualisé – Normes pour l'élaboration, la planification des programmes et la mise en œuvre, 2000* (appelé ci-après *Normes du PEI, 2000*). Ces deux documents sont affichés sur le site Web du ministère de l'Éducation au www.edu.gov.on.ca.

2. Les adaptations désignent des stratégies d'enseignement et d'évaluation individualisées, un soutien fourni par du personnel ou par un équipement personnalisé.

L'élève en difficulté qui ne requiert que des adaptations. Certains élèves en difficulté peuvent suivre le curriculum prévu pour le cours et démontrer un apprentissage autonome si on leur fournit des adaptations. Les adaptations facilitent l'accès au cours sans avoir à modifier les connaissances et les habiletés que l'élève doit manifester. Les adaptations requises pour faciliter l'apprentissage de l'élève doivent être inscrites dans le PEI (voir page 11 des *Normes du PEI, 2000*). Les mêmes adaptations seront probablement inscrites dans le PEI pour plusieurs cours, voire tous les cours.

Offrir des adaptations aux élèves en difficulté devrait être la première option envisagée dans le cadre de la planification des programmes. Les élèves en difficulté peuvent réussir lorsqu'on leur offre des adaptations appropriées. L'enseignement axé sur la conception universelle et la pédagogie différenciée met l'accent sur la disponibilité des adaptations permettant de satisfaire les besoins divers des apprenantes et apprenants.

Il existe trois types d'adaptations :

- Les *adaptations pédagogiques* désignent les changements apportés aux stratégies d'enseignement tels que les styles de présentation, les méthodes d'organisation et l'utilisation d'outils technologiques et multimédias.
- Les *adaptations environnementales* désignent les changements apportés à la salle de classe ou au milieu scolaire tels que la désignation préférentielle d'une place ou le recours à un éclairage particulier.
- Les *adaptations en matière d'évaluation* désignent les changements apportés aux stratégies d'évaluation pour permettre à l'élève de démontrer son apprentissage. Par exemple, on pourrait lui donner plus de temps pour terminer les examens ou ses travaux scolaires, ou lui permettre de répondre oralement à des questions d'examen (pour d'autres exemples, voir page 33 du *Guide du PEI, 2004*).

Si seules des adaptations sont nécessaires dans les cours d'English, le rendement de l'élève sera évalué par rapport aux attentes du cours et par rapport aux niveaux de rendement décrits dans le présent document. La case du PEI sur le bulletin scolaire de l'Ontario ne sera pas cochée et on n'inclura pas d'information sur l'offre d'adaptations.

L'élève en difficulté qui requiert des attentes modifiées. Certains élèves en difficulté auront besoin d'attentes et de tâches modifiées qui ne correspondent pas aux attentes et aux tâches prévues pour le cours. Dans la plupart des cas, ces attentes modifiées seront fondées sur la matière du cours, mais refléteront des changements en ce qui a trait à leur nombre et à leur complexité. Les attentes modifiées représentent des réalisations précises, réalistes, observables et mesurables, et décrivent les connaissances ou les habiletés précises que l'élève peut démontrer de façon autonome en utilisant, au besoin, des adaptations en matière d'évaluation.

Il est important de vérifier l'étendue des modifications apportées aux attentes et de les noter clairement dans le PEI. Tel qu'indiqué dans la section 7.12 du document de politique ministériel *Les écoles secondaires de l'Ontario, de la 9e à la 12e année – Préparation au diplôme d'études secondaires de l'Ontario, 1999*, il reviendra à la directrice ou au directeur d'école de déterminer si la réalisation des attentes modifiées fondées sur le niveau de rendement actuel de l'élève signifie que l'élève a réussi le cours et si l'élève peut recevoir un crédit pour le cours. La directrice ou le directeur d'école informera les parents et l'élève de sa décision.

Lorsqu'on s'attend à ce qu'un élève satisfasse à la plupart des attentes d'un cours, les attentes modifiées devraient indiquer comment les connaissances, les habiletés et les tâches de l'élève différeront de celles des autres élèves suivant ce cours. Lorsque les modifications sont si étendues que la réalisation des attentes d'apprentissage (connaissances, habiletés, tâches) ne donnerait probablement pas droit à un crédit, les attentes devraient spécifier les exigences précises ou les tâches d'après lesquelles le rendement de l'élève sera évalué et en fonction desquelles une note pour le cours sera inscrite dans le bulletin scolaire de l'Ontario.

Les attentes modifiées indiquent les connaissances ou les habiletés que l'élève devrait pouvoir démontrer et qui seront évaluées lors de chaque période visée par le bulletin scolaire (voir pages 10 et 11 des *Normes du PEI, 2000*). Les attentes d'apprentissage de l'élève doivent être revues une fois au moins lors de chaque période visée par le bulletin scolaire et être mises à jour, au besoin, à la lumière des progrès accomplis par l'élève (voir page 11 des *Normes du PEI, 2000*).

Si l'élève requiert des attentes modifiées en English, l'évaluation de son rendement sera fondée sur les attentes d'apprentissage inscrites dans son PEI et sur les niveaux de rendement décrits dans le présent document. Si certaines des attentes d'apprentissage d'un élève pour un cours sont modifiées, mais que l'élève essaie d'obtenir un crédit pour ce cours, il suffit de cocher la case PEI sur le bulletin scolaire de l'Ontario. Cependant, si les attentes d'apprentissage de l'élève sont modifiées de telle façon que la directrice ou le directeur d'école estime qu'un crédit ne sera pas conféré pour le cours, la case PEI doit être cochée et on doit inscrire l'énoncé approprié du *Guide du bulletin scolaire de l'Ontario de la 9e à la 12e année, 1999* (voir page 7). Les commentaires de l'enseignante ou l'enseignant devraient comprendre des renseignements pertinents sur la capacité de l'élève à démontrer qu'elle ou il a satisfait aux attentes modifiées. Le personnel enseignant doit aussi indiquer les prochaines étapes de l'apprentissage de l'élève dans le cadre du cours.

L'ÉDUCATION ANTIDISCRIMINATOIRE DANS LE PROGRAMME D'ENGLISH

Comme tous les programmes-cadres qui composent le curriculum de l'Ontario, le programme d'English prépare l'élève à devenir une citoyenne ou un citoyen responsable, qui comprend la société complexe dans laquelle elle ou il vit et qui y participe pleinement. On s'attend donc à ce que l'élève comprenne bien en quoi consistent les droits, les privilèges et les responsabilités inhérents à la citoyenneté. On s'attend aussi à ce que, dans ses paroles et dans ses actes, elle ou il fasse preuve de respect, d'ouverture et de compréhension envers les individus, les groupes et les autres cultures. Pour ce faire, l'élève doit comprendre toute l'importance de protéger et de respecter les droits de la personne et de s'opposer au racisme et à toute autre forme de discrimination et d'expression de haine. De plus, la contribution des peuples autochtones à la richesse et à la diversité de la vie au Canada doit être valorisée et appréciée.

Les activités d'apprentissage mises en place dans le cadre du programme d'English devraient être de nature inclusive, refléter divers points de vue et expériences et sensibiliser l'élève aux expériences et à la perception des autres. Les habiletés de réflexion et de recherche acquises selon ce programme apprendront à l'élève à reconnaître les partis pris, les stéréotypes et les représentations fondées sur des préjugés et à comprendre comment les relations interpersonnelles sont réellement gérées dans un contexte de mondialisation.

L'éducation inclusive vise à fournir à tous les élèves de la province une chance égale d'atteindre leur plein potentiel en leur permettant d'évoluer dans un environnement sain et sécuritaire. En effet, les élèves ont besoin d'un climat de classe sécurisant et propice à l'apprentissage pour s'épanouir et développer leurs connaissances et leurs compétences, y compris leurs habiletés intellectuelles de niveau supérieur. À cet égard, l'enseignante ou l'enseignant joue un rôle primordial, entre autres, en fixant des attentes élevées pour tous ses élèves et en donnant à chacune et à chacun une attention particulière.

C'est en planifiant des activités enrichissantes permettant d'établir des liens entre des idées rencontrées dans les textes étudiés et des situations concrètes de la vie que l'enseignante ou l'enseignant fournira à ses élèves des occasions de consolider les connaissances et les habiletés rattachées à l'éducation inclusive qui consiste notamment à sensibiliser les élèves à divers problèmes sociaux. En proposant aux élèves des activités qui mettent en valeur le rôle et l'utilité de l'anglais et du bilinguisme dans la vie socioéconomique et culturelle, l'enseignante ou l'enseignant contribue à accroître l'intérêt et la motivation des élèves, tout en les préparant à devenir des citoyens responsables.

Le choix des ressources documentaires et médiatiques proposées aux élèves revêt une importance primordiale dans les cours d'English. Ces ressources doivent non seulement refléter la diversité ethnoculturelle de la société canadienne, mais aussi présenter un intérêt pour les garçons et les filles. Des recherches récentes démontrent en effet que les garçons s'intéressent davantage aux textes documentaires comme les manuels et les livres qui présentent une abondance d'éléments graphiques, alors que les ouvrages de fiction plaisent davantage aux filles. Le guide *Moi lire? Tu blagues!* affiché sur le site Web du Ministère propose diverses stratégies pour susciter et soutenir l'intérêt des garçons pour la lecture et l'écriture et pour favoriser la création d'un milieu d'apprentissage stimulant autant pour les filles que les garçons.

LA LITTÉRATIE ET LA NUMÉRATIE

Les compétences liées à la littératie et à la numératie sont essentielles à tous les apprentissages, dans toutes les disciplines. On définit la littératie comme la maîtrise des savoirs qui permettent à l'élève de s'exprimer, d'écrire, de lire, de chercher des renseignements, d'utiliser les technologies de l'information et de la communication et d'exercer une pensée critique à un niveau fonctionnel dans ses apprentissages actuels et futurs. Quant à la numératie, elle comprend l'ensemble des compétences essentielles basées sur des concepts mathématiques et des compétences connexes, qui permettent à l'élève d'utiliser la mesure et les propriétés des nombres et des objets géométriques, de résoudre des problèmes, de développer sa pensée critique, de lire et d'interpréter les renseignements, faisant appel aux concepts mathématiques et de communiquer des données mathématiques.

La littératie et la numératie permettront à l'élève d'apprendre, sa vie durant, dans toutes les disciplines et d'accéder aux niveaux supérieurs de la pensée. Il incombe au personnel enseignant de toutes les disciplines de veiller à ce que l'élève progresse dans l'acquisition des compétences liées à la littératie et à la numératie. L'enseignante ou l'enseignant qui remarque que l'élève accuse un retard dans l'acquisition des compétences liées à la littératie et à la numératie devra prendre des dispositions particulières pour l'aider en s'inspirant des initiatives de littératie et de numératie élaborées par son conseil scolaire et son école.

Le ministère de l'Éducation facilite l'élaboration de ressources pour appuyer le développement de compétences liées à la littératie et la numératie dans tout le curriculum. Des stratégies pratiques applicables à tous les cours sont fournies dans les documents suivants :

- *La littératie en tête de la 7e à la 12e année : Rapport du groupe d'experts sur les élèves à risque, 2003*
- *La numératie en tête de la 7e à la 12e année : Rapport du groupe d'experts sur les élèves à risque, 2004*
- *La littératie en tête : Stratégies pour toutes les matières de la 7e à la 12e année, 2005*
- *Moi, lire? Tu blagues! Guide pratique pour les garçons en matière de littératie, 2005*

Ces ressources sont affichées sur le site Web du ministère de l'Éducation au www.edu.gov.on.ca.

LE RÔLE DU CENTRE DE RESSOURCES DANS LE PROGRAMME D'ENGLISH

Le centre de ressources de l'école joue un rôle primordial dans l'apprentissage et la réussite des élèves, tout particulièrement dans le contexte du programme-cadre d'English. En proposant une abondance de ressources documentaires et médiatiques, le centre favorise chez les élèves l'acquisition de connaissances, d'habiletés et d'habitudes essentielles dans une société du savoir et dont ils se serviront toute leur vie.

Le centre de ressources permet, entre autres, aux élèves :

- de développer le goût de la lecture, autant pour le plaisir que pour apprendre;
- de découvrir la richesse et la diversité de la production littéraire et médiatique en langue anglaise, au Canada et ailleurs dans le monde;
- d'accéder à des ressources dans toutes les disciplines du curriculum;
- de faire des recherches et de se documenter sur divers sujets;
- de découvrir la richesse du réseau des bibliothèques publiques municipales ou régionales et d'acquérir l'habitude de les fréquenter.

LA PLACE DES TECHNOLOGIES DANS LE PROGRAMME D'ENGLISH

Les technologies de l'information et de la communication (TIC) offrent une gamme d'outils qui peuvent grandement élargir et enrichir les stratégies d'enseignement du personnel enseignant et appuyer l'apprentissage des élèves en English. Ces outils comprennent, entre autres, des logiciels de production (p. ex., traitement de texte, logiciel de dessin, multimédias, dictionnaire, correcteur grammatical, orthographique et syntaxique), des outils numériques (p. ex., appareil photo numérique, scanneur, table de mixage) et des jeux éducatifs (p. ex., modules d'enseignement assisté par ordinateur). Le personnel enseignant peut utiliser les outils et les ressources des TIC dans son enseignement en salle de classe et concevoir des programmes qui répondent aux divers besoins des élèves. Par exemple, rédiger l'ébauche d'un texte à l'ordinateur permet, avec vitesse et souplesse, de réviser et de vérifier, à l'écran et sur papier, les ratures et les changements apportés au texte, d'apporter d'autres changements, de corriger et d'imprimer une copie finale; enregistrer un cercle de lecture sur vidéo peut amener les élèves à mieux comprendre l'art de la discussion; et utiliser des émissions radiophoniques peut leur servir à mieux saisir

les concepts de prosodie. Les TIC peuvent aussi être utilisées pour permettre aux élèves de communiquer avec des élèves d'autres écoles et pour faire entrer la communauté mondiale dans la salle de classe.

Grâce aux sites Web et à divers supports numériques, l'élève peut maintenant accéder à des ressources offertes par des archives et des institutions publiques à travers le pays et autour du monde, ce qui lui permet de trouver les renseignements les plus récents portant sur des sujets d'actualité. Les TIC permettent à l'élève du palier secondaire de mener des recherches plus étendues et plus authentiques que jamais auparavant.

Il faut encourager l'élève à utiliser les TIC chaque fois que cela est approprié. En outre, il est important que l'élève puisse disposer (dans une version imprimée, électronique ou numérique) de toute une gamme d'outils pour lire ou interpréter des documents sous toutes leurs formes et en tirer tous les renseignements. L'élève pourra ainsi développer les habiletés nécessaires à l'utilisation des innovations technologiques et médiatiques et des applications numériques informatisées, à des fins de collecte de données, de simulation, de production, de présentations ou de communication.

LA MAJEURE HAUTE SPÉCIALISATION

La majeure haute spécialisation est un type de programme spécialisé approuvé par le ministère de l'Éducation qui permet aux élèves de se concentrer sur les connaissances et les habiletés importantes de certains secteurs économiques et d'obtenir des certifications reconnues dans ces secteurs, tout en étudiant en vue du diplôme d'études secondaires de l'Ontario (DESO). La majeure a été conçue pour permettre aux élèves de personnaliser leur expérience au palier secondaire en fonction de leurs talents et de leurs champs d'intérêt et pour leur permettre de faire des apprentissages spécifiques et d'acquérir des compétences qui favoriseront leur réussite dans toutes les destinations postsecondaires : formation en apprentissage, collège, université et marché du travail. Chaque majeure cible un domaine particulier afin de préparer les élèves à des études postsecondaires ou à un emploi dans un secteur de l'économie.

Chaque majeure haute spécialisation doit comprendre les cinq composantes énumérées ci-après et définies dans les cadres de référence approuvés par le Ministère pour chaque domaine de spécialisation.

- Ensemble de 9, 10 ou 11 crédits requis (en grande partie provenant de cours de 11e et 12e année) qui trace un itinéraire d'études vers l'une des quatre destinations possibles, soit :
  - quatre crédits de spécialisation,
  - trois ou quatre crédits d'appui à la majeure dans des disciplines pertinentes (p. ex., français, sciences, English, mathématiques, affaires et commerce),
  - deux crédits d'éducation coopérative,
  - deux demi-crédits obligatoires Éducation à la citoyenneté et Exploration de carrière (ou si on effectue une substitution Découvrir le milieu de travail);
- Certifications obligatoires précisées dans chaque cadre de référence;
- Possibilités d'apprentissage par l'expérience;
- Utilisation du Passeport-compétences de l'Ontario (PCO);
- Possibilités d'expérience d'anticipation qui permettent aux élèves de réaliser des apprentissages dans la destination postsecondaire envisagée.

Les cours d'English s'inscrivent dans certains des crédits requis dans les programmes menant à la majeure haute spécialisation ou dans les programmes conçus pour offrir aux élèves des itinéraires d'études spécialisés. Ils permettent à l'élève d'acquérir des connaissances et des compétences qui sont importantes dans des secteurs économiques et qui sont nécessaires pour réussir sur le marché du travail ou pour poursuivre des études postsecondaires, y compris les programmes d'apprentissage. Les cours d'English peuvent être combinés aux crédits d'éducation coopérative pour fournir à l'élève l'expérience en milieu de travail exigée par des programmes de majeure et par différents itinéraires d'études spécialisés. Les programmes de majeure haute spécialisation pourraient fournir des possibilités d'apprentissage dans des secteurs spécifiques, qu'elles soient offertes par des employeurs, des centres de formation professionnelle, des collèges ou des organismes communautaires.

LA PLANIFICATION DE CARRIÈRE

Les attentes et les contenus d'apprentissage du programme d'English offrent à l'élève la possibilité d'appliquer ses habiletés langagières dans de nombreuses situations liées au monde du travail, d'explorer des possibilités d'études postsecondaires, de formation, de métiers et de profession, et devenir un autodidacte. Les cours d'English permettent aussi à l'élève de développer ses habiletés en recherche, de développer des techniques de présentation orale et visuelle et de maîtriser des stratégies de lecture. Peu importe leur destination postsecondaire, tous les élèves ont besoin de réaliser que les habiletés acquises en matière de littératie constituent aussi des habiletés essentielles d'employabilité. Les élèves qui ont développé des habiletés en littératie savent mieux exploiter les technologies de l'information et de la communication pour communiquer efficacement dans diverses situations et pour accomplir des tâches spécifiques.

LE PASSEPORT-COMPÉTENCES DE L'ONTARIO ET LES COMPÉTENCES ESSENTIELLES

Le personnel enseignant qui planifie les cours d'English doit encourager la connaissance, la compréhension et le développement des compétences essentielles et des habitudes de travail nécessaires pour réussir au travail. Le Passeport-compétences de l'Ontario (PCO) est une ressource Web bilingue qui aide les enseignantes et enseignants à tenir compte du milieu de travail en salle de classe. Le PCO offre une description claire des compétences essentielles telles que la lecture des textes, la rédaction, l'utilisation des documents, l'informatique, le calcul et la capacité de raisonnement. On se sert de compétences essentielles dans notre vie de tous les jours et elles sont transférables de l'école au travail, d'un emploi à l'autre et d'un secteur à l'autre. Le PCO inclut une base de données portant sur des tâches en milieu de travail et des descriptions d'importantes habitudes de travail telles que la fiabilité, la sécurité au travail et le service à la clientèle. Il offre aussi aux employeuses et employeurs une méthode cohérente pour évaluer et consigner la démonstration de ces compétences et de ces habitudes de travail par les élèves dans le cadre de leur stage d'éducation coopérative. Les élèves peuvent se servir du PCO pour préciser les compétences et les habitudes de travail déjà acquises, planifier le développement de nouvelles compétences ou montrer aux employeuses et employeurs ce qu'ils peuvent faire.

Les compétences décrites dans le PCO sont les compétences essentielles que le gouvernement du Canada et des agences nationales et internationales ont déterminées à la suite de recherches considérables comme étant les compétences requises pour travailler, apprendre et vivre. Les compétences essentielles constituent la base de l'apprentissage de toute autre habileté et permettent aux personnes de progresser dans leur emploi et de s'adapter au changement en milieu de travail. Pour des précisions sur le PCO et les compétences essentielles, consulter le site http://skills.edu.gov.on.ca.

L'ÉDUCATION COOPÉRATIVE ET LES AUTRES FORMES D'APPRENTISSAGE PAR L'EXPÉRIENCE

L'éducation coopérative et les autres formes d'apprentissage par l'expérience permettent à l'élève d'appliquer les habiletés acquises en salle de classe dans les contextes authentiques au sein de la communauté du monde des affaires et des services publics. L'éducation coopérative et les autres expériences en milieu de travail aident l'élève à approfondir sa connaissance des possibilités d'emploi dans de nombreux domaines, y compris le milieu de l'édition et de la publicité, ainsi que les entreprises médiatiques. De plus, l'élève élargit sa compréhension des pratiques du monde du travail, des certifications et de la nature des relations employeurs-employés. En outre, en se basant sur ses expériences, l'élève reconnaît l'apport de la connaissance des deux langues officielles du Canada. Il s'avère important que les enseignantes et enseignants des cours d'English entretiennent des liens avec les entreprises locales afin d'assurer à l'élève des expériences pratiques qui viendront renforcer les connaissances et les habiletés acquises à l'école.

La préparation aux expériences pratiques en milieu de travail doit comprendre un enseignement sur les mesures liées à la santé et la sécurité en milieu de travail. Le personnel enseignant appuyant l'élève en situation d'apprentissage en milieu de travail doit évaluer les conditions relatives à la santé et à la sécurité dans le milieu de travail. Avant de participer à une expérience en milieu de travail, l'élève doit acquérir les connaissances et les compétences nécessaires pour assurer sa sécurité physique et son bien-être personnel. L'élève doit comprendre les questions relatives la confidentialité et au respect de la vie privée, comme il est énoncé dans la *Loi sur l'accès à l'information et la protection de la vie privée* (1990). Elle ou il a le droit de travailler dans un milieu exempt de mauvais traitements et de harcèlement et doit être sensible aux enjeux portant sur sa sécurité personnelle. L'élève doit être renseigné quant aux ressources scolaires et communautaires, aux politiques de l'école et à la marche à suivre pour signaler toutes formes d'abus et de harcèlement.

La note Politique/Programme n° 76A intitulée *Assurance contre les accidents du travail pour les élèves des programmes de formation pratique* (Septembre 2000) trace les grandes lignes des procédures à suivre pour assurer le respect des dispositions de la *Loi sur la sécurité professionnelle et les assurances contre les accidents du travail* (1997) aux élèves âgés d'au moins 14 ans inscrits à un stage de plus d'une journée en milieu de travail. L'observation au poste de travail et le jumelage sont considérés comme une sortie éducative. Le personnel enseignant doit connaître l'âge minimum requis selon la *Loi sur la santé et la sécurité au travail* (1990) pour trouver un milieu de travail où l'élève peut travailler. Tous les stages d'éducation coopérative et les autres expériences en milieu de travail sont offert, selon les prescriptions énoncées dans *Éducation coopérative et autres formes d'apprentissage par l'expérience : Lignes directrices pour les écoles secondaires de l'Ontario, 2000*.

LA SANTÉ ET LA SÉCURITÉ

Malgré le fait que les questions relatives à la santé et à la sécurité ne sont pas généralement liées à l'enseignement d'une langue, elles peuvent s'avérer importantes lorsque l'apprentissage fait appel à des activités pratiques, en particulier celles qui se déroulent à l'extérieur de l'école. Ces activités offrent une dimension authentique et motivante en ce qui a trait aux expériences d'apprentissage de l'élève. Les enseignantes et enseignants planifieront avec soin ces activités afin de prévoir les problèmes et de prévenir les risques pour la santé et la sécurité de l'élève.

THE PROGRAM IN ENGLISH

OVERVIEW OF THE PROGRAM

The English program in Grades 9 to 12 includes core courses and other courses. All students are required to take one credit in English to obtain their secondary school diploma. An additional two credits may count towards compulsory credits.

Core courses emphasize strong competencies in oral and oral-visual communication, reading and interpretation, and writing and representation. Students may choose from three types of core courses in Grades 11 and 12: university preparation, college preparation, and workplace preparation.

The remaining English courses provide students with opportunities to explore individual interests and to deepen and extend their knowledge and skills in English through more thematic and specialized study. These courses are offered in four types: university preparation, university/college preparation, college preparation, and open.

Students choose between course types on the basis of their interests, achievement, and postsecondary goals. The course types offered in Grades 11 and 12 are defined as follows:

- ***University preparation courses*** *are designed to equip students with the knowledge and skills they need to meet the entrance requirements for university programs.*
- ***University/college preparation courses*** *are designed to equip students with the knowledge and skills they need to meet the entrance requirements for specific programs offered at universities and colleges.*
- ***College preparation courses*** *are designed to equip students with the knowledge and skills they need to meet the requirements for entrance to most college programs or for admission to specific apprenticeship or other training programs.*
- ***Workplace preparation courses*** *are designed to equip students with the knowledge and skills they need to meet the expectations of employers, if they plan to enter the workplace directly after graduation, or the requirements for admission to many apprenticeship or other training programs.*
- ***Open courses*** *are designed to broaden students' knowledge and skills in subjects that reflect their interests and to prepare them for active and rewarding participation in society. They are not designed with the specific requirements of universities, colleges, or the workplace in mind.*

Courses in English, Grades 11 and 12

Grade	Course Name	Course Type	Course Code	Prerequisite
Core Courses				
11	English	University	EAE3U	Grade 10 English, Academic
11	English	College	EAE3C	Grade 10 English, Applied
11	English	Workplace	EAE3E	Grade 10 English, Applied
12	English	University	EAE4U	Grade 11 English, University, or Grade 11 Canadian Literature, University/College
12	English	College	EAE4C	Grade 11 English, College, or Grade 11 Canadian Literature, University/College
12	English	Workplace	EAE4E	Grade 11 English, Workplace
Note: Each of the courses listed above is worth one credit.				
Other Courses				
11	Canadian Literature	University/ College	EAT3M	Grade 10 English, Academic or Applied
11	Communication in the World of Business and Technology	Open	EAB3O	Grade 10 English, Academic or Applied
12	English Literature	University	EAL4U	Grade 11 English, University, or Grade 11 Canadian Literature, University/College
12	The Writer's Craft	University	EAC4U	Grade 11 English, University, or Grade 11 Canadian Literature, University/College
12	The Writer's Craft	College	EAC4C	Grade 11 English, College, or Grade 11 Canadian Literature, University/College
Note: Each of the courses listed above is worth one credit.				

Prerequisite Charts for English, Grades 9–12

These charts map out all the courses in the discipline and show the links between courses and the possible prerequisites for them. They do not attempt to depict all possible movements from course to course.

Core Courses

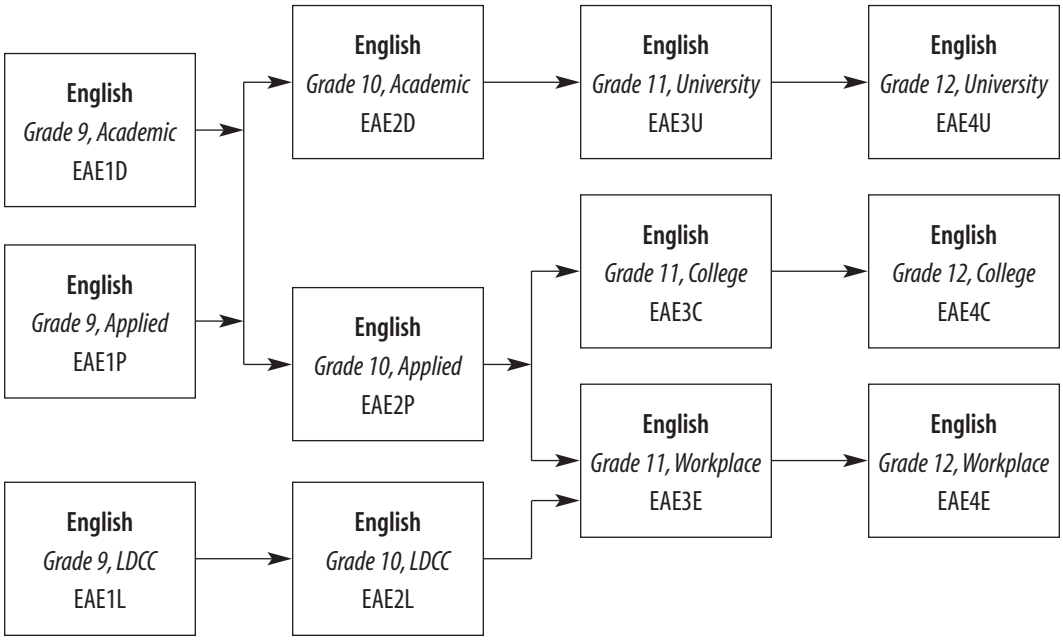

Other Courses

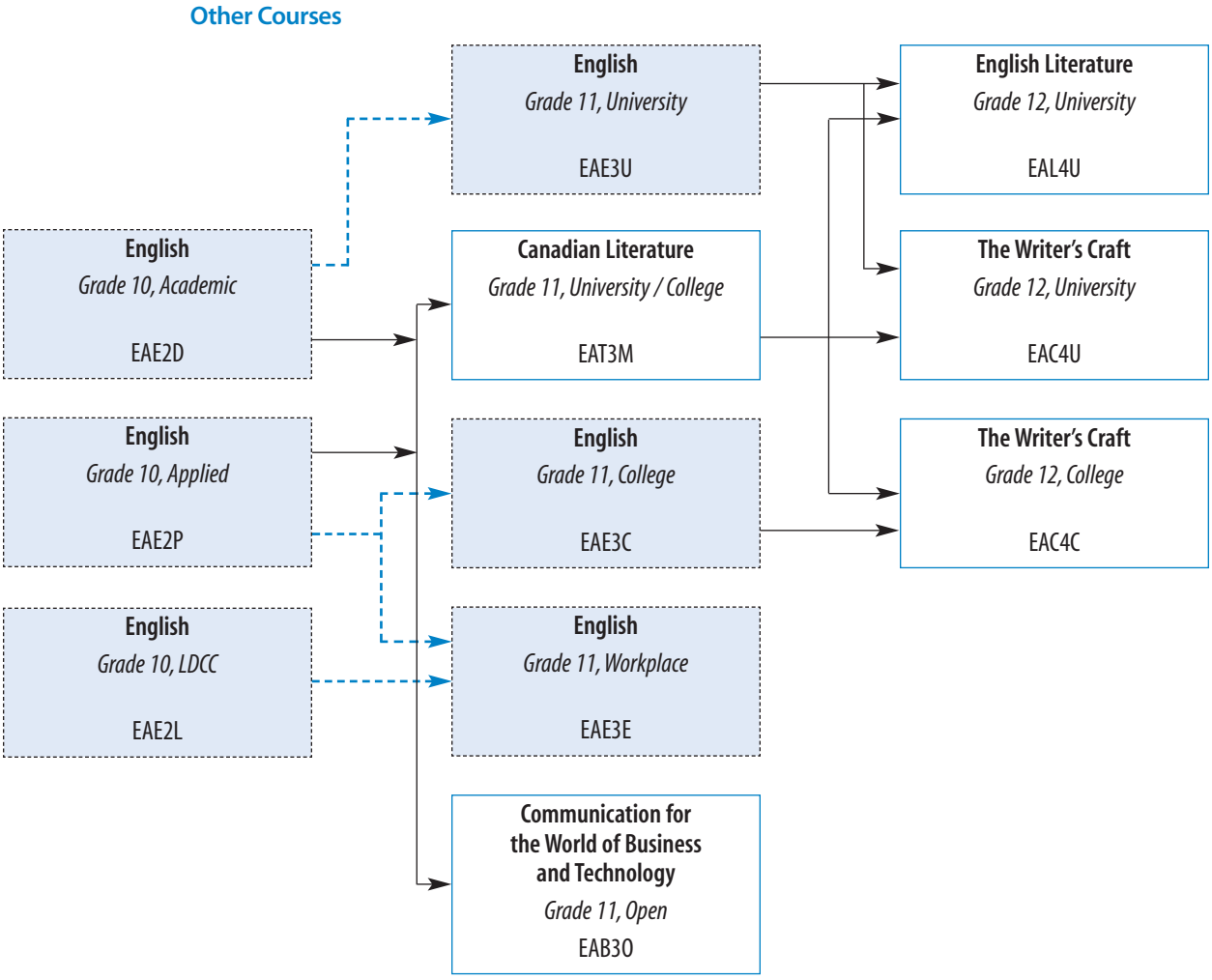

Note: Dotted lines indicate core courses.

Half-Credit Courses. The courses outlined in this document are designed to be offered as full-credit courses. However, half-credit courses may be developed for specialized programs as long as the original course is not designated as a requirement for entry into a university program. However, they may also be delivered as half-credit courses. Half-credit courses, which require a minimum of fifty-five hours of scheduled instructional time, must adhere to the following conditions:

- The two half-credit courses created from a full course must together contain all of the expectations of the full course. The expectations for each half-credit course must be drawn from all strands of the full course and must be divided in a manner that best enables students to achieve the required knowledge and skills in the allotted time.
- A course that is a prerequisite for another course in the secondary curriculum may be offered as two half-credit courses, but students must successfully complete both parts of the course to fulfil the prerequisite. (Students are not required to complete both parts unless the course is a prerequisite for another course they wish to take.)

- The title of each half-credit course must include the designation *Part 1* or *Part 2*. A half credit (0.5) will be recorded in the credit-value column of both the report card and the Ontario Student Transcript.

Boards will ensure that all half-credit courses comply with the conditions described above, and will report all half-credit courses to the ministry annually in the School October Report.

Anglais pour débutants (APD). Mastery of English varies greatly among students attending French-language secondary schools in Ontario. In some areas of the province, students communicate in English and are exposed to English media on a daily basis. In other areas, however, exposure to the English language is limited. Francophone students who move to Ontario from other provinces may also have limited exposure to English, while francophone students from other countries may have had no exposure to English.

APD courses are offered to students who have little or no knowledge of the English language. APD emphasizes the development of English vocabulary and knowledge of English language conventions in the strands of Oral Communications, Reading, Writing, and Social Skills and Cultural Awareness. Four APD courses are offered to students. Students may take any of all of these courses depending on their needs, their level of competency in the English language, and their ability in learning a second language. Students who complete APD 4 may proceed to take a regular English course at the Grade 11 or 12 level.

CURRICULUM EXPECTATIONS

The expectations identified for each course describe the knowledge and skills that students are expected to develop and demonstrate in their class work, on tests, and in various other activities on which their achievement is assessed and evaluated.

Two sets of expectations are listed for each course – overall expectations and specific expectations. The *overall expectations* describe in general terms the knowledge and skills that students are expected to demonstrate by the end of each grade. The *specific expectations* describe the expected knowledge and skills in greater detail. The specific expectations are grouped under numbered headings, each of which indicates the overall expectation to which the group of specific expectations corresponds. Taken together, the overall and specific expectations represent the mandated curriculum.

The following illustrates how the specific expectations are grouped into headings for each strand in the core courses:

	Oral and Oral-Visual Communication	Reading and Interpretation	Writing and Representation
Heading	Listening and Responding Speaking Skills Preparing and Delivering Presentations Reflecting on Oral and Oral-Visual Communication Skills and Strategies	Comprehending and Interpreting Understanding Forms and Their Characteristics Applying Critical Literacy Skills Reflecting on Reading and Interpretation Skills and Strategies	Developing and Organizing Content Researching Applying Knowledge of Forms and Techniques Revising, Editing, and Publishing Texts Reflecting on Writing and Representation Skills and Strategies

In the English curriculum, the *overall expectations* outline standard sets of knowledge and skills required for effective listening and speaking, reading and writing, and viewing and representing. They encompass the types of understanding, skills, approaches, and processes that are applied by effective communicators of all ages and levels of development, and are therefore described in constant terms from grade to grade. The English curriculum focuses on developing the depth and level of sophistication of students' knowledge and skills associated with each of these key overall expectations by increasing the complexity of the texts they work with and the tasks they perform over time.

The *specific expectations* clarify the levels that distinguish the expectations between course types and reflect the progression in knowledge and skills from grade to grade through: (1) the wording of the expectation itself, and/or (2) the examples that are given in parentheses in the expectation. The examples help to clarify the requirements specified in the expectations and suggest the intended depth and level of complexity of the expectations. They have been developed to model appropriate practice for the grade and are meant to serve as illustrations for teachers. Teachers can choose to use the examples that are appropriate for their classrooms or they may develop their own approaches that reflect a similar level of complexity. Whatever the specific ways in which the requirements outlined in the expectations are implemented in the classroom, they must, wherever possible, be inclusive and reflect the diversity of the student population and the population of the province.

STRANDS IN THE CORE ENGLISH CURRICULUM

The expectations in the courses of the English curriculum are organized in three strands, or broad areas of learning – Oral and Oral-Visual Communication, Reading and Interpretation, and Writing and Representation. The program in all grades is designed to develop a range of essential skills in these three interrelated areas, built on a solid foundation of knowledge of the conventions of standard English and incorporating the use of analytical, critical, and metacognitive thinking skills. Students learn best when

they are encouraged to consciously monitor their thinking as they learn, and each strand includes specific expectations that call for such reflection.

As the strand names imply, the texts studied in each strand will include a variety of media forms. Students will therefore learn to interpret, analyse, and assess the ideas, information, and messages in a wide range of English-language literary and informational texts, including visual, audio-visual and media texts, and to communicate in English in a variety of text forms, often using technological resources to enhance their messages.

The areas of learning are closely interrelated, and the knowledge and skills described in the three strands are interdependent and complementary. Teachers are expected to plan activities that blend expectations from the three strands in order to provide students with the kinds of experiences that promote meaningful learning and that help students recognize how literacy skills in the three areas reinforce and strengthen one another.

Oral and Oral-Visual Communication. Oral and oral-visual communication is a fundamental way of relating to others; for example, most francophones living and working in Canadian society view, listen to, and speak English more than they read or write it. The English curriculum places great emphasis on helping students develop strong oral and oral-visual communication skills. The abilities to listen and view actively and critically, to interact verbally with others, and to express and clarify thoughts, feelings, and opinions in formal and informal speaking situations, using visual or technological aids where appropriate, are at the core of basic literacy. These skills play a central role in students' learning, enabling them to become better communicators at school, at home, and in the community. Given the importance of bilingualism in our province and our global society, it is vital that students in French-language schools be able to interact in both official languages with various groups, agencies, organizations, and services in their community and elsewhere.

To develop their oral and oral-visual communication skills, students need numerous opportunities to listen to and view communications on a range of subjects and for a variety of purposes. Students view and listen in order to understand concepts, solve problems, provide information, and express thoughts. By exposing students to a wide variety of oral and oral-visual communications in different media, students develop a better understanding of the relationship among form, purpose, audience, and context, and of the importance of active and critical listening and viewing to comprehend both spoken and unspoken messages.

To become effective speakers, students need frequent opportunities to practise speaking in formal and informal situations. They need to be explicitly taught techniques and strategies of effective speaking, and given opportunities to practise them, so that they can become accomplished communicators, able to speak precisely, coherently, and with purpose to a variety of audiences. Students must also learn to adjust their voice, speaking style, and the level of language they use to suit their purpose and audience, and, when making presentations, to integrate visual or multimedia aids that will enhance their message.

The English program should provide students with opportunities to engage in oral activities related to the expectations in *all* strands, such as brainstorming to identify what they know about the topic of a new text they are about to hear or read, discussing problem-solving strategies related to a writing assignment or a collaborative oral-visual

presentation, debating issues set out in texts heard or read, defending their own ideas, and offering critiques of the ideas of others. When they converse about information and ideas, they become aware of forms, styles, imagery, language structures, and conventions used by other speakers.

Reading and Interpretation. The Reading and Interpretation strand focuses on developing the skills that will enable students to become effective interpreters of all forms of texts, including media texts. Students need to be able to read well in English to be fully engaged in the civic and social life of their community, province, and country. During their secondary school years, and particularly during their postsecondary studies and in their careers, they will often need to rely on their English-language reading skills to accomplish their studies and their work successfully.

The study of literature offers students opportunities to expand their intellectual horizons and to extend and strengthen their literacy skills. As a creative representation of life and experience, literature raises important questions about the human condition, now and in the past. It is crucial that students who struggle with traditional literature be exposed to other forms of narratives. These forms may be print, visual, musical, or some combination, and can include web pages, rock videos, television shows, cartoons, and jokebooks. As students increase their knowledge of accomplished writers and literary texts in English and vicariously experience times, events, cultures, and values different from their own, they deepen their understanding of the many dimensions of human thought and human experience. Literary texts by both women and men drawn from many genres, historical periods, and cultures reflect the diversity of Canada and the world.

Such texts include the following:

- short stories by Ray Bradbury, Ernest Buckler, Morley Callaghan, Rock Carrier, Anton Chekhov, Wayson Choy, Richard Connell, Roald Dahl, Arthur Conan Doyle, Hugh Garner, Anne Hart, Langston Hughes, Evan Hunter, W. W. Jacobs, Shirley Jackson, McKinlay Kantor, Tom King, Jack London, Stuart MacLean, Carson McCullers, Farley Mowat, Alden Nowlan, O. Henry, Liam O'Flaherty, Edgar Allan Poe, Saki (H. H. Munro), Alice Walker, Budge Wilson, Tim Wynne-Jones
- poetry by Maya Angelou, Elizabeth Brewster, John Robert Colombo, Emily Dickinson, William Henry Drummond, Robert Frost, Langston Hughes, Pauline Johnson , Joy Kogawa, Ogden Nash, Alden Nowlan , Alfred Noyes, Edgar Allan Poe, Duncan Campbell Scott, Robert Service, Raymond Souster, Walt Whitman, William Carlos Williams
- plays by Robert Carroll, Rex Deverell, Lucille Fletcher, Thompson Highway, William Shakespeare, Neil Simon, Drew Hayden Taylor
- novels by William Bell, Cherie Bennett, & Jeff Gottesfeld, Judy Blume, Agatha Christie, Paolo Coelho, Robert Cormier, Margaret Craven, Charles De Lint, Lois Duncan, S. E. Hinton, Anne Holm, Harper Lee, C. S. Lewis, Jack London, Malcolm Lowry, Farley Mowat, Gary Paulsen, Conrad Richter, Eli Weisel, E. B. White, Robb White, John Wyndham, Tim Wynn-Jones, Paul Zindel

– non-fiction by Dave Barry, Harry Bruce, Sharon Butala, Stevie Cameron, John Robert Colombo, Geoffrey Cowley, Robert Fulghum, Stephen Garey, Martin Luther King, Gary Lautens, Stuart MacLean, Faith Popcorn, Lauren Robinson, David Suzuki, Alice Walker, Michele Wood, Sultana Yusufali

(The preceding lists of authors are provided to indicate the level of challenge that reading programs should entail, and are not intended to suggest prescribed reading.)

All students, regardless of their postsecondary plans, need to read and interpret a balance of exemplary literary and informational texts that nourish the imagination, promote intellectual growth, and provide a broad range of language models for their own writing and producing. These texts enrich students' understanding of themes and issues and enhance their appreciation of the power and beauty of language. Just as important are informational texts which help students become confident, proficient, and flexible readers. A balanced reading program also includes a range of print and electronic informational texts, such as newspaper and magazine articles, essays, reference materials, memos, advertisements, brochures, reports, instruction manuals, CD-ROMs, databases, websites.

The English reading program includes a wide range of materials in a variety of fiction and non-fiction genres and in various media. The kinds of texts studied should not be limited to those set out in the specific expectations or the examples under "Applying Knowledge of Forms and Their Characteristics". These expectations and examples, however, serve as a guide to help teachers provide a diversified reading program. The program includes a balance of both classic and contemporary literature of a high standard, including works produced by Canadians. Teachers routinely use materials that reflect the diversity of Canadian and world cultures, and make those resources available to students. Within each grade and from one grade to another, students should be assigned texts of increasing complexity as they develop their reading skills, and should also have many opportunities to select their own reading materials.

Writing and Representation. Learning to write or produce is a multifaceted process involving the development and refinement over time of a range of knowledge and skills. Students build on their writing and producing knowledge and skills from one school year to the next, learning to express themselves with increasing precision and clarity in personal, academic, and, later on, workplace situations. A central goal of the Writing and Representation strand is to promote students' growth as confident writers and researchers who can communicate competently using a range of forms and styles in various media to suit specific purposes and audiences and correctly applying the conventions of language – grammar, usage, spelling, and punctuation. These conventions are best learned in the context of meaningful and creative writing activities that allow students to develop the ability to think and write clearly and effectively.

Writing and producing, from initial musings to final publication, is a complex process that involves a range of complementary thinking and composing skills, as well as other language processes, including reading, speaking, and listening. As writers and producers create, they consider their audience; make decisions about form, style, and organization; and apply their knowledge of language and technology. To develop these competencies,

students need a supportive classroom environment, with opportunities to extend and refine their skills in using the writing process and doing research. They also need opportunities to apply these skills and to write and create daily, in many forms and genres, for a variety of purposes and audiences, and within different time constraints. The forms and genres explored may include essays, reports, short stories, poetry, scripts, journals, letters, biographies, articles, reviews, explanations, instructions, notes, procedures, résumés, and advertisements. Because postsecondary institutions and employers require clear, well organized writing, on demand and within strict timelines, students also need to learn and practise strategies for writing effectively and correctly in the context of examinations and in-class writing assignments.

The English program teaches students to use a process approach to writing, in which the different stages of writing overlap and are revisited in a recursive pattern, from the initial planning stage, which involves the generation of ideas and the development of a writing plan, through the drafting, revising, editing, and publishing stages. The overall expectations in the English curriculum reflect this writing process.

Students should be given the kinds of assignments that provide opportunities to produce writing that is interesting and original and that reflects their capacity for independent critical thought. Writing and producing activities that students see as meaningful and that challenge them to think creatively about topics and concerns of interest to them will lead to a fuller and more lasting command of the essential skills of writing.

Note: The other courses in the Grade 11–12 English program provide students with language knowledge and skills in oral and oral-visual communication, reading and interpretation, and writing and representation, as do the core courses. However, each of these courses has a thematic or specialized focus. The expectations in these courses are therefore clustered in strands that reflect the emphasis of each particular course.

ASSESSMENT AND EVALUATION OF STUDENT ACHIEVEMENT

BASIC CONSIDERATIONS

The primary purpose of assessment and evaluation is to improve student learning. Information gathered through assessment helps teachers to determine students' strengths and weaknesses in their achievement of the curriculum expectations in each course. This information also serves to guide teachers in adapting curriculum and instructional approaches to students' needs and in assessing the overall effectiveness of programs and classroom practices.

Assessment is the process of gathering information from a variety of sources (including assignments, day-to-day observations and conversations/conferences, demonstrations, projects, performances, and tests) that accurately reflects how well a student is achieving the curriculum expectations in a subject. As part of assessment, teachers provide students with descriptive feedback that guides their efforts towards improvement. Evaluation refers to the process of judging the quality of student work on the basis of established criteria, and assigning a value to represent that quality.

Assessment and evaluation will be based on the provincial curriculum expectations and the achievement levels outlined in this document.

In order to ensure that assessment and evaluation are valid and reliable, and that they lead to the improvement of student learning, teachers must use assessment and evaluation strategies that:

- address both what students learn and how well they learn;
- are based both on the categories of knowledge and skills and on the achievement level descriptions given in the achievement chart on pages 34–35;

- are varied in nature, administered over a period of time, and designed to provide opportunities for students to demonstrate the full range of their learning;
- are appropriate for the learning activities used, the purposes of instruction, and the needs and experiences of the students;
- are fair to all students;
- accommodate the needs of students with special education needs, consistent with the strategies outlined in their Individual Education Plan;
- accommodate the needs of students who are learning the language of instruction (English or French);
- ensure that each student is given clear directions for improvement;
- promote students' ability to assess their own learning and to set specific goals;
- include the use of samples of students' work that provide evidence of their achievement;
- are communicated clearly to students and parents at the beginning of the course or the school term and at other appropriate points throughout the school year.

All curriculum expectations must be accounted for in instruction, but evaluation focuses on students' achievement of the overall expectations. A student's achievement of the overall expectations is evaluated on the basis of his or her achievement of related specific expectations. The overall expectations are broad in nature, and the specific expectations define the particular content or scope of the knowledge and skills referred to in the overall expectations. Teachers will use their professional judgement to determine which specific expectations should be used to evaluate achievement of the overall expectations, and which ones will be covered in instruction and assessment (e.g., through direct observation) but not necessarily evaluated.

The characteristics given in the achievement chart (pages 34–35) for level 3 represent the "provincial standard" for achievement of the expectations in a course. Parents of students achieving at level 3 can be confident that their children will be prepared for work in subsequent courses.

Level 1 identifies achievement that falls much below the provincial standard, while still reflecting a passing grade. Level 2 identifies achievement that approaches the standard. Level 4 identifies achievement that surpasses the standard. It should be noted that achievement at level 4 does not mean that the student has achieved expectations beyond those specified for a particular course. It indicates that the student has achieved all or almost all of the expectations for that course, and that he or she demonstrates the ability to use the specified knowledge and skills in more sophisticated ways than a student achieving at level 3.

The Ministry of Education provides teachers with materials that will assist them in improving their assessment methods and strategies and, hence, their assessment of student achievement. These materials include samples of student work (exemplars) that illustrate achievement at each of the four levels.

THE ACHIEVEMENT CHART FOR ENGLISH

The achievement chart that follows identifies four categories of knowledge and skills in English. The achievement chart is a standard province-wide guide to be used by teachers. It enables teachers to make judgements about student work that are based on clear performance standards and on a body of evidence collected over time.

The purpose of the achievement chart is to:

- provide a common framework that encompasses all curriculum expectations for all courses outlined in this document;
- guide the development of quality assessment tasks and tools (including rubrics);
- help teachers to plan instruction for learning;
- assist teachers in providing meaningful feedback to students;
- provide various categories and criteria with which to assess and evaluate students' learning.

Categories of Knowledge and Skills. The categories, defined by clear criteria, represent four broad areas of knowledge and skills within which the subject expectations for any given course are organized. The four categories should be considered as interrelated, reflecting the wholeness and interconnectedness of learning.

The categories of knowledge and skills are described as follows:

- *Knowledge and Understanding.* Subject-specific content acquired in each course (knowledge), and the comprehension of its meaning and significance (understanding).
- *Thinking.* The use of critical and creative thinking skills and/or processes, as follows:
  - planning skills (e.g., generating ideas, gathering information, focusing research, organizing information)
  - processing skills (e.g., drawing inferences, interpreting, analysing, synthesizing, evaluating, forming conclusions)
  - critical/creative thinking processes (e.g., critical literacy, metacognition invention)

- *Communication.* The conveying of meaning through various oral, written, and visual forms, including electronic forms (e.g., presentations, charts, graphs, tables, maps, models, web pages, spreadsheets, flyers, financial statements, letters, memos, reports).
- *Application.* The use of knowledge and skills to make connections within and between various contexts.

Teachers will ensure that student work is assessed and/or evaluated in a balanced manner with respect to the four categories, and that achievement of particular expectations is considered within the appropriate categories.

Criteria. Within each category in the achievement chart, criteria are provided, which are subsets of the knowledge and skills that define each category. For example, in Knowledge and Understanding, the criteria are "knowledge of content (e.g., forms of text, reading, writing, speaking and listening strategies, elements of style, terminology)" and "understanding of content (e.g., concepts; ideas; opinions; relationships among facts, ideas, concepts, themes)". The criteria identify the aspects of student performance that are assessed and/or evaluated, and serve as guides to what to look for.

Descriptors. A "descriptor" indicates the characteristic of the student's performance, with respect to a particular criterion, on which assessment or evaluation is focused. In the achievement chart, *effectiveness* is the descriptor used for each criterion in the Thinking, Communication, and Application categories. What constitutes effectiveness in any given performance task will vary with the particular criterion being considered. Assessment of effectiveness may therefore focus on a quality such as appropriateness, clarity, accuracy, precision, logic, relevance, significance, fluency, flexibility, depth, or breadth, as appropriate for the particular criterion. For example, in the Thinking category, assessment of effectiveness might focus on the degree of relevance or depth apparent in an analysis; in the Communication category, on clarity of expression or logical organization of information and ideas; or in the Application category, on appropriateness or breadth in the making of connections. Similarly, in the Knowledge and Understanding category, assessment of knowledge might focus on accuracy, and assessment of understanding might focus on the depth of an explanation. Descriptors help teachers to focus their assessment and evaluation on specific knowledge and skills for each category and criterion, and help students to better understand exactly what is being assessed and evaluated.

Qualifiers. A specific "qualifier" is used to define each of the four levels of achievement – that is, *limited* for level 1, *some* for level 2, *considerable* for level 3, and *a high degree* or *thorough* for level 4. A qualifier is used along with a descriptor to produce a description of performance at a particular level. For example, the description of a student's performance at level 3 with respect to the first criterion in the Thinking category would be: "the student uses planning skills with *considerable* effectiveness".

The descriptions of the levels of achievement given in the chart should be used to identify the level at which the student has achieved the expectations. In all of their courses, students should be given numerous and varied opportunities to demonstrate the full extent of their achievement of the curriculum expectations across all four categories of knowledge and skills.

The Achievement Chart for English: Grades 9–12

Categories	Level 1 50-59%	Level 2 60-69%	Level 3 70-79%	Level 4 80-100%
Knowledge and Understanding – Subject-specific content acquired in each grade (knowledge), and the comprehension of its meaning and significance (understanding)				
	The student:			
Knowledge of content (e.g., forms of text, reading, writing, speaking and listening strategies, elements of style, terminology)	demonstrates limited knowledge of content	demonstrates some knowledge of content	demonstrates considerable knowledge of content	demonstrates thorough knowledge of content
Understanding of content (e.g., concepts; ideas; opinions; relationships among facts, ideas, concepts, themes)	demonstrates limited understanding of content	demonstrates some understanding of content	demonstrates considerable understanding of content	demonstrates thorough understanding of content
Thinking – The use of critical and creative thinking skills and/or processes				
	The student:			
Use of planning skills (e.g., generating ideas, gathering information, focusing research, organizing information)	uses planning skills with limited effectiveness	uses planning skills with some effectiveness	uses planning skills with considerable effectiveness	uses planning skills with a high degree of effectiveness
Use of processing skills (e.g., drawing inferences, interpreting, analysing, synthesizing)	uses processing skills with limited effectiveness	uses processing skills with some effectiveness	uses processing skills with considerable effectivenessuses critical/creative thinking	uses processing skills with a high degree of effectiveness
Use of critical/creative thinking processes (e.g., evaluation, forming of conclusions, critical/creative analysis, critical literacy, metacognition)	uses critical/creative thinking processes with limited effectiveness	uses critical/creative thinking processes with some effectiveness	processes with considerable effectiveness	uses critical/creative thinking processes with a high degree of effectiveness

Categories	Level 1 50-59%	Level 2 60-69%	Level 3 70-79%	Level 4 80-100%
Communication – The conveying of meaning through various forms				
	The student:			
Expression and organization of ideas and information précises (e.g., clear expression, logical organization) **in oral, visual, and written forms, including media forms**	expresses and organizes ideas and information with limited effectiveness	expresses and organizes ideas and information with some effectiveness	expresses and organizes ideas and information with considerable effectiveness	expresses and organizes ideas and information with a high degree of effectiveness
Communication for different audiences and purposes (e.g., appropriate style, voice and point of view) **in oral, visual, and written forms, including media forms**	communicates for different audiences and purposes with limited effectiveness	communicates for different audiences and purposes with some effectiveness	communicates for different audiences and purposes with considerable effectiveness	communicates for different audiences and purposes with a high degree of effectiveness
Use of conventions (e.g., grammar, spelling, punctuation, usage), **vocabulary, and terminology of the discipline in oral, visual, and written forms, including media forms**	uses conventions, vocabulary, and terminology of the discipline with limited effectiveness	uses conventions, vocabulary, and terminology of the discipline with some effectiveness	uses conventions, vocabulary, and terminology of the discipline with considerable effectiveness	uses conventions, vocabulary, and terminology of the discipline with a high degree of effectiveness
Application – The use of knowledge and skills to make connections within and between various contexts				
	The student:			
Application of knowledge and skills (e.g., concepts, strategies, oral communication, writing and reading processes) **in familiar contexts**	applies knowledge and skills in familiar contexts with limited effectiveness	applies knowledge and skills in familiar contexts with some effectiveness	applies knowledge and skills in familiar contexts with considerable effectiveness	applies knowledge and skills in familiar contexts with a high degree of effectiveness
Transfer of knowledge and skills (e.g., use of technology, oral communication, writing and reading processes) **to new contexts**	transfers knowledge and skills to new contexts with limited effectiveness	transfers knowledge and skills to new contexts with some effectiveness	transfers knowledge and skills to new contexts with considerable effectiveness	transfers knowledge and skills to new contexts with a high degree of effectiveness
Making connections within and between various contexts (e.g., between text and personal knowledge and experience, between text and other texts, and between text and the world outside school)	makes connections within and between various contexts with limited effectiveness	makes connections within and between various contexts with some effectiveness	makes connections within and between various contexts with considerable effectiveness	makes connections within and between various contexts with a high degree of effectiveness

EVALUATION AND REPORTING OF STUDENT ACHIEVEMENT

Student achievement must be communicated formally to students and parents by means of the Provincial Report Card, Grades 9–12. The report card provides a record of the student's achievement of the curriculum expectations in every course, at particular points in the school year or semester, in the form of a percentage grade. The percentage grade represents the quality of the student's overall achievement of the expectations for the course and reflects the corresponding level of achievement as described in the achievement chart for the discipline.

A final grade is recorded for every course, and a credit is granted and recorded for every course in which the student's grade is 50 per cent or higher. The final grade for each course in Grades 9 to 12 will be determined as follows:

- Seventy per cent of the grade will be based on evaluations conducted throughout the course. This portion of the grade should reflect the student's most consistent level of achievement throughout the course, although special consideration should be given to more recent evidence of achievement.
- Thirty per cent of the grade will be based on a final evaluation in the form of an examination, performance, essay, and/or other method of evaluation suitable to the course content and administered towards the end of the course.

REPORTING ON DEMONSTRATED LEARNING SKILLS

The report card provides a record of the learning skills demonstrated by the student in every course, in the following five categories: Works Independently, Teamwork, Organization, Work Habits, and Initiative. The learning skills are evaluated using a four-point scale (E-Excellent, G-Good, S-Satisfactory, N-Needs Improvement). The separate evaluation and reporting of the learning skills in these five areas reflects their critical role in students' achievement of the curriculum expectations. The evaluation of learning skills, apart from any that may be included as part of a curriculum expectation in a course, should not be considered in the determination of percentage grades.

CORE COURSES

English, Grade 11

University Preparation — EAE3U

This course emphasizes the development of literacy, communication, and critical and creative thinking skills that are necessary for success in academic and daily life. Students will analyse challenging literary texts from a variety of countries and periods; interpret a range of informational and media texts; produce a variety of creative, persuasive, and analytical written and media texts; and apply their knowledge of effective oral communication skills in a variety of formal and informal contexts. The course focuses on clear expression, precision in the use of language, and the effective use of stylistic devices.

Prerequisite: English, Grade 10, Academic

ORAL AND ORAL-VISUAL COMMUNICATION

OVERALL EXPECTATIONS

By the end of this course, students will:

1. use active listening strategies and higher-order thinking skills to interpret, make inferences about, and respond to a variety of situations for a variety of purposes;
2. use appropriate speaking skills and strategies when communicating in formal and informal situations;
3. prepare and deliver a variety of independent and collaborative oral and oral-visual communications, using appropriate forms, conventions, and techniques;
4. analyse their listening and speaking strategies and set goals to improve their oral communication skills.

SPECIFIC EXPECTATIONS

1. Listening and Responding

By the end of this course, students will:

Using Active Listening Strategies

1.1 use a variety of active listening strategies in a range of situations, including working in groups, selecting them according to the purpose of the situation *(e.g., brainstorm solutions to problems that arise when planning and organizing the staging of an adaptation of a play by Shakespeare)*

Comprehension Strategies

1.2 identify and use a range of comprehension strategies to understand and clarify the meaning of complex and challenging oral communications (*e.g., formulate questions for the presenter while listening to a presentation)*

Analysing Texts

1.3 identify information, ideas, and point of view in a variety of oral communications, and analyse the strategies used in them to inform, persuade, or entertain *(e.g., identify logical and illogical arguments and determine the relevance of the evidence presented in a debate)*

Making Inferences

1.4 make inferences about messages in increasingly complex texts, using the language of the text and oral and visual cues to support their interpretations *(e.g., explain the effect of images on an audience watching TV news reports on a war)*

Critical Literacy

1.5 express and defend opinions on the content, tone, perspectives, and/or biases in oral communications *(e.g., use examples when expressing their opinion about whether the use of language in an ad is effective)*

Understanding Elements, Conventions, and Techniques

1.6 identify the elements, conventions, and techniques used in a variety of oral and oral-visual communications, and explain how they convey meaning, and influence and engage an audience *(e.g., analyse the use of vocal inflection in a production of a play by Shakespeare)*

2. Speaking Skills

By the end of this course, students will:

Using Appropriate Language

2.1 use appropriate words, phrases, and terminology, as well as inclusive and non-discriminatory language, to communicate precisely and effectively to a specific audience *(e.g., identify when formal language, such as "my esteemed colleague" and "my honourable colleague" in a formal debate, is appropriate and use it)*

Stylistic Devices

2.2 use stylistic devices to illustrate ideas and to engage a specific audience *(e.g., use rhetorical questions and parallel structure to influence the audience when participating in a debate)*

Clarity and Coherence

2.3 communicate in a clear and coherent manner, presenting information and ideas in ways that are appropriate for the purpose, subject matter, and audience *(e.g., present strong and well-focused arguments in speeches delivered as a member of a debating team)*

Speaking Effectively

2.4 identify and use a range of vocal effects *(e.g., tone, pace, pitch, volume)* and non-verbal cues *(e.g., facial expressions, gestures, eye contact)* to communicate effectively and engage an audience *(e.g., adjust the volume and tempo of their speech and use facial expressions and mannerisms in ways that suit the character they are portraying in an adaptation of a scene from a play by Shakespeare)*

3. Preparing and Delivering Presentations

By the end of this course, students will:

Using a Process

3.1 use a process approach when producing independent or collaborative oral and oral-visual presentations *(e.g., make a list of the props and costumes that will be needed for the staging of a play)*

Creative Performances

3.2 deliver an individual or a collaborative creative performance of their own or others' writing, including an adaptation *(e.g., act in their own one-act play)*

Formal Speaking

3.3 deliver a formal presentation *(e.g., seminar related to a text or issue under study)* that is based on analysis and research, that adheres to a teacher-prescribed time limit, and that includes the following:

- a captivating introduction, a thesis, development with a minimum of three main arguments, and a powerful conclusion
- synthesis of research, clear organization of ideas, and relevant examples
- properly documented research, including citing of sources to avoid plagiarism
- effective audio-visual aids *(e.g., video, props, graphs, charts)*
- use of rhetorical devices
- effective delivery *(e.g., timing, fluidity, intonation)*
- audience involvement

3.4 present a debate that adheres to Ontario Student Debating Union procedures and time constraints, and that includes the following:

- a powerful opening
- attention to the thesis
- persuasive devices *(e.g., tone, emphasis, repetition)*
- arguments and counter-arguments for rebuttal *(e.g., open, closed, and rhetorical questions)*
- use of notes taken during the debate for rebuttal
- a concise summary of supporting arguments to bring closure

Media Texts

3.5 produce oral and/or oral-visual media texts of some technical complexity, using appropriate forms, conventions, and techniques *(e.g., create an oral behind-the-scenes report about a major school event)*

Using Effective Presentation Skills

3.6 adapt presentation strategies according to the audience's verbal and non-verbal responses to maintain or increase effectiveness of delivery *(e.g., increase the audience's goodwill towards them by following its applause for something their opponent in a debate has said by praising an aspect of what was said before delivering their rebuttal)*

4. Reflecting on Oral and Oral-Visual Communication Skills and Strategies

By the end of this course, students will:

Metacognition

4.1 identify the strategies they found most helpful in producing and interpreting oral and oral-visual communications *(e.g., list the interpreting strategies that were helpful to them as they listened to a professional speaker give a talk at their school)*

Setting Goals

4.2 identify their oral communication strengths and weaknesses, and set goals for strengthening the areas in which they need improvement

READING AND INTERPRETATION

OVERALL EXPECTATIONS

By the end of this course, students will:

1. identify a variety of reading strategies and use them appropriately before, during, and after reading to understand ideas and information in increasingly challenging texts;
2. identify and describe the form, structure, and stylistic elements in a variety of literary texts, including modern texts and works from various historical periods and cultures, and in informational texts, including media texts, produced for a variety of audiences and purposes;
3. demonstrate a range of critical literacy skills by analysing and assessing overt and implied messages in a text, the author's use of stylistic techniques, and the perspectives presented in the text;
4. analyse their skills as readers and interpreters of texts and set goals for improvement.

SPECIFIC EXPECTATIONS

1. Comprehending and Interpreting

By the end of this course, students will:

Purpose

1.1 choose reading materials that are appropriate for an assigned purpose and adapt their reading style to suit both the purpose and the style of the texts *(e.g., read a novel, paying particular attention to the setting as research for an essay on the effect of setting on a narrative)*

Demonstrating Understanding

1.2 summarize the main ideas and supporting details in texts, identifying relevant information for an assigned task *(e.g., summarize two contrasting editorials on the same issue)*

Making Inferences

1.3 develop interpretations of increasingly complex texts, using stated and implied ideas from the texts to support their interpretations *(e.g., examine differing points of view on websites about a text under study and assess the credibility of what is written on the sites, using specific references to them)*

Analysing Texts

1.4 analyse the characteristics and elements of style in a variety of increasingly complex texts and explain how they contribute to the meaning of the text and influence the reader's reaction *(e.g., explain how an editorial writer's choice of diction can sway readers, causing them to change their minds and agree with his/her point of view)*

Extending Understanding

1.5 extend understanding of texts by connecting the ideas in them to their own knowledge, experiences, and insights; to other texts; and to the world around them *(e.g., compare the points of view in two editorials on the same issue)*

2. Understanding Forms and Their Characteristics

By the end of this course, students will:

Fiction/Literature

2.1 read a range of literature from various periods and cultures (short stories, poems, modern and historical plays, and novels) and explain how the elements of stories *(e.g., plot, theme, conflict, character, setting)* and the literary/stylistic techniques *(e.g., satire, dramatic irony, oxymoron, paradox, pathetic fallacy, nemesis, figure of speech)* work together to communicate meaning and enhance their effectiveness

Informational Texts

2.2 read a range of informational texts (print and electronic reports, research papers and articles) and explain how their text patterns, text features, and other characteristics, including the following, help convey information effectively:

- presentation of information
- integration of researched facts
- graphics
- layout

- point of view
- level of language

Persuasive Texts

2.3 read a range of persuasive texts (editorials, persuasive essays) from various print and electronic sources, and explain how their text patterns, text features, and other characteristics, including the following, help convey information effectively:

- topic sentence
- thesis statement
- structure of arguments/organization of information
- level of language
- persuasive and rhetorical devices

2.4 read a variety of literary essays from various print and electronic sources, and explain how their text patterns, text features, and other characteristics, including the following, help convey information effectively *(e.g., identify and evaluate the effectiveness of the compare-and-contrast pattern in simple literary essays)*:

- topic sentence
- thesis statement
- structure of arguments/organization of information
- level of language
- persuasive and rhetorical devices

Media Texts

2.5 interpret a range of media texts, explaining how their elements, conventions, and techniques vary according to purpose and audience *(e.g., identify the elements that made a multimedia presentation interesting)*

3. Applying Critical Literacy Skills

By the end of this course, students will:

Evaluating Texts

3.1 evaluate the quality and effectiveness of a text, basing their assessment on evidence from the text, on previous knowledge, and on comparisons with other texts *(e.g., determine whether the point-by-point or block method of comparison is more effective in comparative essays on the same topic)*

Assessing Information

3.2 recognize and challenge false, incomplete, or misleading information and bias, stereotypes, and prejudice in texts *(e.g., analyse short stories and novels and determine whether they contain stereotyping in their portrayals of female characters)*

Production Perspective

3.3 identify who produces various media texts and determine their interests and/or perspectives, and describe how the texts both shape and reflect values, trends, and behaviour in society *(e.g., analyse news coverage of major conflicts, including wars, in print or on TV, and assess whether the coverage is credible and whether it unduly influences the public's perception)*

Author

3.4 explain how the life of an author, including his or her cultural and social background, can influence a text *(e.g., assess how much William Golding's World War II experiences influenced him in his choice of themes in* Lord of the Flies*)*

4. Reflecting on Reading and Interpretation Skills and Strategies

By the end of this course, students will:

Metacognition

4.1 identify the strategies they used before, during, and after reading, and identify which of them were most helpful in interpreting texts *(e.g., explain how researching the setting of a text under study helped them understand its plot and enhanced their appreciation of the artistry of the text)*

Setting Goals

4.2 identify their reading and interpretation strengths and weaknesses, and set goals for strengthening the areas in which they need improvement

WRITING AND REPRESENTATION

OVERALL EXPECTATIONS

By the end of this course, students will:

1. use a variety of pre-writing strategies to generate ideas, and plan the content and organization of texts effectively and according to their purpose and audience;
2. apply strategies to select, organize, and document information for research purposes from a variety of texts and electronic resources;
3. write texts in a variety of forms and for various media, applying their knowledge of the stylistic techniques and other characteristics associated with each form;
4. revise, edit, and publish their texts to refine expression, correct errors, and present their work effectively;
5. analyse their writing and producing strategies and set goals for improvement.

SPECIFIC EXPECTATIONS

1. Developing and Organizing Content

By the end of this course, students will:

Purpose and Audience

1.1 use a variety of pre-writing strategies to determine a purpose and audience and generate topics for a text, and to develop ideas and arguments for the text and locate information that will support the ideas and arguments *(e.g., use free-writing to generate ideas for writing on their own about a topic discussed by the class)*

Organizing

1.2 sort, classify, and order main and supporting ideas and details by manipulating and organizing them into units that could be used for writing a text *(e.g., use a chart to list points of comparison for an essay comparing two characters or two novels)*

2. Researching

By the end of this course, students will:

Planning Their Research

2.1 determine the focus of their research and develop a plan for gathering information *(e.g., brainstorm for arguments representative of both sides of a controversial issue and interview experts on the topic for an informational essay)*

Researching and Recording

2.2 locate and select research material, and summarize and/or paraphrase important ideas and information, making records of all sources in order to cite them and avoid plagiarism *(e.g., condense ideas and supporting arguments from a work being used for research for an argumentative essay, restating the author's words in their own words, and recording passages that may be quoted and reference details about information that may be used in the essay)*

Preparing an Outline

2.3 identify main and supporting ideas and information, and organize key points by determining a logical order in which to present them *(e.g., plot the evolution of a tragic hero in a play by Shakespeare on a chart in preparation for writing an essay on the character)*

Incorporating Sources

2.4 cite evidence and examples to support ideas and information *(e.g., use information from research materials to support their arguments in essays, ensuring that such references keep to the author's intended message and that quotations from the sources are accurate)*

Respecting Methodology

2.5 apply the basic elements of a standard method for presenting information in a text, including the title page, table of contents, and references *(e.g., use the MLA [Modern Language Association] or the APA [American Psychological Association] method for citing references)*

3. Applying Knowledge of Forms and Techniques

By the end of this course, students will:

Creative Texts

3.1 write creative texts *(e.g., additional chapter for novel under study, one-act play, interview script related to a work of fiction)* that use the following:

- a variety of literary/stylistic devices *(e.g., allusion, paradox, irony)*
- imaginative and original ideas
- words that have strong connotations

Informational/Persuasive Texts

3.2 write an editorial that includes the following:

- an enticing hook and a clear position
- a combination of strong opinions and relevant arguments
- a call to action in the conclusion

3.3 write a persuasive essay that contains a minimum of 1000 words and that:

- has an engaging introduction that presents a thesis and a preview of the content of the essay
- has a body that develops ideas logically and provides convincing evidence to support the thesis
- has a logical conclusion that emphasizes the thesis and summarizes the main ideas
- uses transitional devices for unity and coherence
- incorporates relevant quotations effectively
- follows an accepted system of documentation *(e.g., MLA [Modern Language Association], APA [American Psychological Association])*

3.4 write a simple literary essay that compares elements of two works *(e.g., characters, settings, themes)*, that contains a minimum of 800 words, and that:

- discusses similarities and differences
- uses words and phrases that are standard in making comparisons *(e.g., "whereas", "on the other hand", "however")*
- contains value judgements *(e.g., about the motivations, strengths, and weaknesses of characters; on their preference for one genre over another)*

3.5 write coherent, essay-type responses to questions about texts under study, using the following:

- a clear, well-focused introduction
- references to key passages from the text and relevant support in the body paragraphs
- an effective conclusion that restates the key ideas

Media Texts

3.6 produce media texts that have the elements, conventions, and techniques associated with their form, purpose, and audience *(e.g., create a multimedia research presentation by combining images, text, and sound)*

4. Revising, Editing, and Publishing Texts

By the end of this course, students will:

Revising

4.1 make revisions to improve the content, clarity, and interest of their written work, and the appropriateness of its tone, using feedback from their peers and teacher and focusing on the following:

- research that is smoothly incorporated
- a level of language that is appropriate for the target audience
- words and phrases that emphasize important ideas and make an impression on the target audience
- readability
- arguments supported by evidence
- a variety of sentence types and structures
- techniques to achieve particular effects *(e.g., use appeal to logic and appeal to emotion in editorials)*

Editing

4.2 edit and proofread their work, using a variety of reference materials *(e.g., print and online dictionaries, thesauruses, glossaries, spell-check programs)* and applying the language conventions listed on page 46

Publishing

4.3 produce final drafts, using a variety of technological resources to format their work and enhance its presentation *(e.g., use a variety of the functions of a presentation software program when creating a multimedia presentation)*

5. Reflecting on Writing and Representation Skills and Strategies

By the end of this course, students will:

Metacognition

5.1 identify the skills and strategies they used in the process of writing and producing texts *(e.g., identify which method of organizing/filing their research material was most helpful)*

Setting Goals

5.2 identify their writing and producing skills and weaknesses, and set goals for strengthening the areas in which they need improvement

Language Conventions

In drafting, revising, editing, and proofreading their texts, students will apply their knowledge of the language conventions appropriate for their grade. In this course, students will:

Sentences/Syntax

- construct complex and compound-complex sentences correctly;
- use parallel grammatical constructions for parallel ideas;
- avoid mixed constructions *(e.g., is when, is because)*, and illogical and/or confusing constructions *(e.g., double negatives)*,
- write clear sentences, varying the order of sentence parts occasionally *(e.g., invert the order of the subject and the verb)*;
- use appositive, prepositional, and verbal phrases for variety and to achieve clarity;

Use of Verbs

- recognize the present subjunctive and past subjunctive forms of verbs and use them to express speculation, wishes, and demands;

Use of Other Parts of Speech

- use pronoun case forms correctly *(e.g., possessive case to modify a gerund)*;
- use linking words and repeat parallel phrases and structures to indicate transitions in and between paragraphs;
- use a wide variety of transitional words and phrases effectively to link parts of sentences, sentences in paragraphs, and paragraphs;
- repeat parallel phrases and structures to indicate transitions in and between paragraphs;

Punctuation

- use punctuation to clarify meaning, add emphasis, and show a grammatical relationship between words;
- use commas with non-restrictive clauses and contrasting expressions;
- use semicolons between independent clauses;
- use the dash to indicate a break in thought;
- use a colon at the end of the introduction to a list, after salutations, and to separate the title and subtitle of a book in a bibliographical entry;

Spelling

- use a variety of aids and strategies to spell words correctly *(e.g., electronic resources, knowledge of root words and spelling patterns, peer conferencing, checklist of frequently misspelled words)*.

English, Grade 11

College Preparation EAE3C

This course emphasizes the development of literacy, communication, and critical and creative thinking skills that are necessary for success in academic and daily life. Students will analyse and respond critically to literary texts from Canada and other countries; interpret a variety of informational and media texts; create texts in a variety of forms for school-related and practical purposes; and consolidate skills and strategies that contribute to effective oral communication. Important focuses are establishing an appropriate voice for specific purposes and audiences and using language with precision and clarity.

Prerequisite: English, Grade 10, Applied

ORAL AND ORAL-VISUAL COMMUNICATION

OVERALL EXPECTATIONS

By the end of this course, students will:

1. use active listening strategies and higher-order thinking skills to interpret, make inferences about, and respond to a variety of situations for a variety of purposes;
2. use appropriate speaking skills and strategies when communicating in formal and informal situations;
3. prepare and deliver a variety of independent and collaborative oral and oral-visual communications, using appropriate forms, conventions, and techniques;
4. analyse their listening and speaking strategies and set goals to improve their oral communication skills.

SPECIFIC EXPECTATIONS

1. Listening and Responding

By the end of this course, students will:

Using Active Listening Strategies

1.1 use a variety of active listening strategies in a range of situations, including working in groups, selecting them according to the purpose of the situation *(e.g., summarize the interviewer's questions orally or on paper before answering them during a simulated interview)*

Comprehension Strategies

1.2 identify and use a range of comprehension strategies to understand and clarify the meaning of complex and challenging oral communications *(e.g., jot down important information while viewing a documentary)*

Analysing Texts

1.3 identify information, ideas, and point of view in a variety of communications, and analyse the strategies used in them to inform, persuade, or entertain *(e.g., identify effective interviewing techniques by watching videos of simulated job interviews)*

Making Inferences

1.4 make inferences about messages using the language of the text and oral and visual cues to support their interpretations *(e.g., explain how the use of slang and humour in ads for products or in election campaigns can influence an audience)*

Critical Literacy

1.5 express and defend opinions on the content, tone, perspectives, and/or biases in oral communications *(e.g., analyse the views of bystanders or witnesses in a news report on an Aboriginal dispute or issue)*

Understanding Elements, Conventions, and Techniques

1.6 identify the elements, conventions, and techniques used in a variety of oral and oral-visual communications, and explain how they convey meaning, and influence and engage an audience *(e.g., assess to what degree techniques such as camera angle and lighting enhance the presentation of a newscast)*

2. Speaking Skills

By the end of this course, students will:

Using Appropriate Language

2.1 use appropriate words, phrases, and terminology, as well as inclusive and non-discriminatory language, to communicate precisely and effectively *(e.g., use business and/or technical terms that are relevant to a job they are being interviewed for in a simulated interview)*

Stylistic Devices

2.2 use stylistic devices to illustrate ideas and to engage a specific audience *(e.g., use comparison and contrast to keep an audience interested when presenting a monologue)*

Clarity and Coherence

2.3 communicate in a clear and coherent manner, presenting information and ideas in ways that are appropriate for the purpose, subject matter, and audience *(e.g., present information clearly and concisely when answering questions in a simulated job interview)*

Speaking Effectively

2.4 identify and use a range of vocal effects *(e.g., tone, pace, pitch, volume)* and non-verbal cues *(e.g., facial expressions, gestures, eye contact)* to communicate effectively and engage an audience *(e.g., use enunciation, posture, gestures, and eye contact to hold the interest of the interviewer in a simulated job interview or of the audience in a seminar presentation)*

3. Preparing and Delivering Presentations

By the end of this course, students will:

Using a Process

3.1 use a process approach when producing independent or collaborative oral and oral-visual presentations *(e.g., eliminate details in their seminar presentation so that its length is within the specified time limit)*

Creative Performances

3.2 deliver an individual or a collaborative creative performance of their own or others' writing, including an adaptation *(e.g., deliver a reading or a performance of their alternative ending to a short story under study)*

Formal Speaking

3.3 demonstrate the following interview skills:

- preparing questions and answers for the interview
- researching the prospective job and place of employment
- practising speaking clearly and confidently *(e.g., work on pronunciation, tone, enunciation)*
- practising the use of an appropriate level of language
- practising using non-verbal skills *(e.g., eye contact, firm handshake, posture)*
- paying attention to appearance in preparing for the interview
- using non-verbal skills and appropriate level of language in the interview
- following up on the interview

Media Texts

3.4 produce oral and/or oral-visual media texts of some technical complexity, using appropriate forms, conventions, and techniques *(e.g., produce a short video explaining how to prepare for a job interview)*

Using Effective Presentation Skills

3.5 adapt presentation strategies according to the audience's verbal and non-verbal responses to maintain or increase effectiveness of delivery *(e.g., make points more economically in response to signs of restlessness among audience members during a debate)*

4. Reflecting on Oral and Oral-Visual Communication Skills and Strategies

By the end of this course, students will:

Metacognition

4.1 identify the strategies they found most helpful in producing and interpreting oral and oral-visual communications *(e.g., identify which of the strategies they used to relax and appear confident in the role-play of an interview were effective)*

Setting Goals

4.2 identify their oral communication strengths and weaknesses, and set goals for strengthening the areas in which they need improvement

READING AND INTERPRETATION

OVERALL EXPECTATIONS

By the end of this course, students will:

1. identify a variety of reading strategies and use them appropriately before, during, and after reading to understand ideas and information in increasingly challenging texts;
2. identify and describe the form, structure, and stylistic elements in a variety of literary texts, including modern texts and works from various historical periods and cultures, and in informational texts, including media texts, produced for a variety of audiences and purposes;
3. demonstrate a range of critical literacy skills by analysing and assessing overt and implied messages in a text, the author's use of stylistic techniques, and the perspectives presented in the text;
4. analyse their skills as readers and interpreters of texts and set goals for improvement.

SPECIFIC EXPECTATIONS

1. Comprehending and Interpreting

By the end of this course, students will:

Purpose

1.1 choose reading materials that are appropriate for an assigned purpose and adapt their reading style to suit both the purpose and the style of the texts *(e.g., read troubleshooting instructions in an automotive or technological manual when trying to solve a specific problem)*

Demonstrating Understanding

1.2 summarize the main ideas and supporting details in texts, identifying relevant information for an assigned task *(e.g., summarize the main ideas in two reviews of the same movie)*

Making Inferences

1.3 develop interpretations of increasingly complex texts, using stated and implied ideas from the texts to support their interpretations *(e.g., assess the effect a report on high-school dropouts will have on students, using relevant information from the report)*

Analysing Texts

1.4 analyse the characteristics and elements of style in a variety of texts and explain how they contribute to the meaning of the text and influence the reader's reaction *(e.g., explain why colloquialisms in a text make the text engaging)*

Extending Understanding

1.5 extend understanding of texts by connecting the ideas in them to their own knowledge, experiences, and insights; to other texts; and to the world around them *(e.g., compare the perspective on drinking and driving in a student's report read in class with that in a newspaper editorial on the same issue)*

2. Understanding Forms and Their Characteristics

By the end of this course, students will:

Fiction/Literature

2.1 read a range of literature from various periods and cultures (short stories, poems, modern and historical plays, and novels) and explain how the elements of stories *(e.g., plot, theme, conflict, character, setting)* and the literary/stylistic techniques *(e.g., irony, satire, hyperbole, figure of speech)* work together to communicate meaning and enhance their effectiveness

Informational Texts

2.2 read a range of print and electronic reports and articles, and explain how their text patterns, text features, and other characteristics, including the following, help convey information effectively:

- presentation of information
- integration of researched facts
- use of graphics

- layout
- point of view
- level of language

2.3 read a variety of types of correspondence *(e.g., letters of application, thank-you letters following interviews, memos, cover letters to accompany résumés)* from various print and electronic sources and explain how their text patterns, text features, and other characteristics, including the following, help convey information effectively:

- layout
- organization of information
- main and supporting information
- level of language

Persuasive Texts

2.4 read a range of persuasive texts (advice columns, opinion pieces) from various print and electronic sources and explain how their text patterns, text features, and other characteristics, including the following, help convey information effectively:

- topic sentence
- thesis statement
- structure of arguments/organization of information
- level of language
- persuasive and rhetorical devices

Media Texts

2.5 interpret a range of media texts, explaining how their elements, conventions, and techniques vary according to purpose and audience *(e.g., identify elements that make web-based résumés appealing)*

3. Applying Critical Literacy Skills

By the end of this course, students will:

Evaluating Texts

3.1 evaluate the quality and effectiveness of a text, basing their assessment on evidence from the text, on previous knowledge, and on comparisons with other texts *(e.g., determine whether the use of charts and graphs in reports make the information being presented clearer)*

Assessing Information

3.2 recognize and challenge false, incomplete, or misleading information and bias, stereotypes, and prejudice in texts *(e.g., analyse the data and findings in an evaluative report, determining whether they contain bias or misleading information)*

Production Perspective

3.3 identify who produces various media texts and determine their interests and/or perspectives, and describe how the texts both shape and reflect values, trends, and behaviour in society *(e.g., explain how magazine ads featuring slender models promote a false body image)*

Author

3.4 explain how the life of an author, including his or her cultural and social background, can influence a text *(e.g., determine whether John Steinbeck's life and work experiences in California in his teens and 20s influenced him in his portrayal of migrant workers in* Of Mice and Men*)*

4. Reflecting on Reading and Interpretation Skills and Strategies

By the end of this course, students will:

Metacognition

4.1 identify the strategies they used before, during, and after reading, and identify which of them were most helpful in interpreting texts *(e.g., explain how a peer-and-teacher conference increased their interest in and understanding of a text's subject matter)*

Setting Goals

4.2 identify their reading and interpretation strengths and weaknesses, and set goals for strengthening the areas in which they need improvement

WRITING AND REPRESENTATION

OVERALL EXPECTATIONS

By the end of this course, students will:

1. use a variety of pre-writing strategies to generate ideas, and plan the content and organization of texts effectively and according to their purpose and audience;
2. apply strategies to select, assess, organize, and document information for research purposes from a variety of texts and electronic resources;
3. write texts in a variety of forms and for various media, applying their knowledge of the stylistic techniques and other characteristics associated with each form;
4. revise, edit, and publish their texts to refine expression, correct errors, and present their work effectively;
5. analyse their writing and producing strategies and set goals for improvement.

SPECIFIC EXPECTATIONS

1. Developing and Organizing Content

By the end of this course, students will:

Purpose and Audience

1.1 use a variety of pre-writing strategies to determine a purpose and audience and generate topics for a text, and to develop ideas and arguments for the text and locate information that will support the ideas and arguments *(e.g., select job ads from a variety of newspapers for which they want to write letters of application)*

Organizing

1.2 sort, classify, and order main and supporting ideas and details by manipulating and organizing them into units that could be used for writing a text *(e.g., put ideas for a web-based résumé in different file folders)*

2. Researching

By the end of this course, students will:

Planning Their Research

2.1 determine the focus of their research and develop a plan for gathering information *(e.g., develop a focus statement to shape their research for an evaluative report)*

Researching and Recording

2.2 locate and select research material, and summarize and/or paraphrase important ideas and information, making records of all sources in order to cite them and avoid plagiarism *(e.g., make notes while reading research material for an opinion piece, adding their own thoughts and ideas beside the notes)*

Preparing an Outline

2.3 identify main and supporting ideas and information, and organize key points by determining a logical order in which to present them *(e.g., rank ideas from the least important to the most important in an outline for an advice column or opinion piece)*

Incorporating Sources

2.4 cite evidence and examples to support ideas and information *(e.g., incorporate survey results into an evaluative report)*

Respecting Methodology

2.5 apply the basic elements of a standard method for presenting information in a text, including the title page, table of contents, and references *(e.g., use the MLA [Modern Language Association] or the APA [American Psychological Association] method for citing references)*

3. Applying Knowledge of Forms and Techniques

By the end of this course, students will:

Creative Texts

3.1 write short creative texts *(e.g., additional chapter for novel under study, one-act play)* that include the following:

- conflict *(e.g., between two characters)*
- literary/stylistic devices *(e.g., metaphors, hyperbole)* to achieve a desired effect or purpose
- strong characterization
- realistic dialogue

Informational Texts

3.2 write an evaluative report *(e.g., on the quality of the food in the cafeteria, causes of smoking, causes of juvenile delinquency)* that includes the following:

- an introduction that states the purpose and the intended audience, and contains a summary of the report's recommendations
- a body containing findings, including the results of surveys, and an analysis of the issue
- graphs and tables illustrating findings
- a conclusion outlining the recommendations in detail

3.3 write a variety of types of correspondence *(e.g., letters of application, thank-you letters following interviews, memos, cover letters to accompany résumés)*, focusing on:

- factual details
- formal language
- organizational elements *(e.g., heading, salutation, body, closing of a letter)*

Persuasive Texts

3.4 write persuasive texts *(e.g., opinion pieces, advice columns)* that contain:

- a developed and supported point of view
- a combination of arguments and opinions
- a call to action in the conclusion

3.5 write short essay-type responses to questions about texts under study that have:

- a clear introduction
- body paragraphs that contain references to key passages in the text and relevant support
- an effective conclusion that restates the essay's key ideas

Media Texts

3.6 produce media texts that have the elements, conventions, and techniques associated with their form, purpose, and audience *(e.g., create a web-based résumé for a potential employer)*

4. Revising, Editing, and Publishing Texts

By the end of this course, students will:

Revising

4.1 make revisions to improve the content, clarity, and interest of their written work, and the appropriateness of its tone, using feedback from the teacher and their peers and focusing on the following:

- elimination of irrelevant details
- verification of information
- a level of language that is appropriate for the target audience
- words and phrases that emphasize important ideas and make an impression on the target audience
- readability
- a variety of sentence types and structures
- stylistic techniques to achieve particular effects *(e.g., indicate a character's agitation or intensity of feeling through the use of halting speech when writing a one-act play)*

Editing

4.2 edit and proofread their work, using a variety of reference materials *(e.g., print and online dictionaries, thesauruses, glossaries, spell-check programs)* and applying the language conventions listed on page 54

Publishing

4.3 produce final drafts, using a variety of technological resources to format their work and enhance its presentation *(e.g., use graphics and other visual elements to enhance presentation in a report)*

5. Reflecting on Writing and Representation Skills and Strategies

By the end of this course, students will:

Metacognition

5.1 identify the skills and strategies they used in the process of writing and producing texts *(e.g., identify their most effective editing tool or technique and share it with classmates)*

Setting Goals

5.2 identify their writing and producing skills and weaknesses, and set goals for strengthening the areas in which they need improvement

Language Conventions

In drafting, revising, editing, and proofreading their texts, students will apply their knowledge of the language conventions appropriate for their grade. In this course, students will:

Sentence Structure

- construct complex and compound-complex sentences correctly;
- use parallel grammatical constructions for parallel ideas;

Use of Verbs

- apply the rules of subject-verb agreement;
- avoid inappropriate shifts in verb tenses;

Use of Other Parts of Speech

- ensure that pronouns agree with their antecedents;
- use a wide variety of transitional words effectively and appropriately;

Spelling

- spell common words and business, technical, and literary terms correctly;
- use a variety of strategies to spell words correctly *(e.g., electronic resources, knowledge of spelling patterns and of rules such as doubling the final consonant before adding the suffix)*;

Punctuation and Capitalization

- use periods, question marks, exclamation marks, commas, semicolons, colons, apostrophes, quotation marks, hyphens, and dashes correctly
- use parentheses and square brackets correctly *(e.g., use parentheses to enclose supplementary information and square brackets around additions to quoted material)*;
- apply the rules for capitalizing place names, company and organizational names, names of buildings, elements of addresses, historical events, parts of letters, titles of books, and abbreviations.

English, Grade 11

Workplace Preparation EAE3E

This course emphasizes the consolidation of the basic literacy skills – reading, writing, listening, and speaking – and critical thinking skills necessary for success in the workplace and in daily life. Students will interpret and respond critically to informational texts, media texts, and contemporary literary texts from Canada and other countries; create a variety of written and media texts; and examine and apply models of effective oral communication. An important focus is using language clearly and accurately when producing texts for practical purposes.

Prerequisite: English, Grade 10, Applied

ORAL AND ORAL-VISUAL COMMUNICATION

OVERALL EXPECTATIONS

By the end of this course, students will:

1. use active listening strategies and higher-order thinking skills to interpret, make inferences about, and respond to a variety of situations for a variety of purposes;
2. use appropriate speaking skills and strategies when communicating in formal and informal situations;
3. prepare and deliver a variety of independent and collaborative oral and oral-visual communications, using appropriate forms, conventions, and techniques;
4. analyse their listening and speaking strategies and set goals to improve their oral communication skills.

SPECIFIC EXPECTATIONS

1. Listening and Responding

By the end of this course, students will:

Using Active Listening Strategies

1.1 use a variety of active listening strategies in a range of situations, including working in groups, selecting them according to the purpose of the situation *(e.g., summarize the contributions of other group members before offering their own in a discussion about the writing of a script)*

Comprehension Strategies

1.2 identify and use a range of comprehension strategies to understand and clarify the meaning of challenging oral communications *(e.g., paraphrase ideas and note key facts when listening to oral reports on biographies)*

Analysing Texts

1.3 identify information, ideas, and point of view in a variety of communications, and analyse the strategies used in them to inform, persuade, or entertain *(e.g., identify the key information used to sway the audience in a simulated job interview)*

Making Inferences

1.4 make inferences about messages using the language of the text and oral and visual cues to support their interpretations *(e.g., analyse ads in a trade magazine, determining what effect their layout and placement in the magazine will likely have on readers)*

Critical Literacy

1.5 express and defend opinions on the content, tone, perspectives, and/or biases in oral communications *(e.g., present constructive criticism after watching peers role-play in a simulated job interview)*

Understanding Elements, Conventions, and Techniques

1.6 identify the elements, conventions, and techniques used in a variety of oral and oral-visual communications, and explain how they convey meaning, and influence and engage an audience *(e.g., assess whether techniques such as sound effects, camera angle, and props enhanced a music video)*

2. Speaking Skills

By the end of this course, students will:

Using Appropriate Language

2.1 use appropriate words, phrases, and terminology, as well as inclusive and non-discriminatory language, to communicate precisely and effectively *(e.g., use business terms in a simulated job interview and avoid words or phrases that indicate bias)*

Stylistic Devices

2.2 use stylistic devices to illustrate ideas and to engage a specific audience *(e.g., use similes that will be relevant to the audience when delivering an oral report on a biography)*

Expanding Vocabulary

2.3 use strategies to expand vocabulary *(e.g., maintain a word list related to a variety of trades and apply their knowledge of prefixes, suffixes, and root words to help them remember their meanings)*

Clarity and Coherence

2.4 communicate in a clear and coherent manner, presenting information and ideas in ways that are appropriate for the purpose, subject matter, and audience *(e.g., speak clearly and concisely when answering the interviewer's questions in a job interview role-play)*

Speaking Effectively

2.5 identify and use a range of vocal effects *(e.g., tone, pace, pitch, volume)* and non-verbal cues *(e.g., facial expressions, gestures, eye contact)* to communicate effectively and engage an audience *(e.g., use an appropriate tone of voice, posture, and gestures, and eye contact in a simulated job interview)*

3. Preparing and Delivering Presentations

By the end of this course, students will:

Using a Process

3.1 use a process approach when producing independent or collaborative oral and oral-visual presentations *(e.g., practise answering questions for a simulated job interview, adopting appropriate posture, tone of voice, and gestures)*

Creative Performances

3.2 deliver an individual or a collaborative creative performance of their own or others' writing, including an adaptation *(e.g., perform one of the parts in key scenes from a work under study)*

Formal Speaking

3.3 demonstrate the following interview skills:

- preparing questions and answers for the interview
- researching the prospective job and employer
- practising speaking clearly and confidently *(e.g., work on pronunciation, tone, enunciation)*
- practising the use of an appropriate level of language
- practising the use of non-verbal skills *(e.g., eye contact, firm handshake, posture)*
- paying attention to appearance in preparing for the interview
- participating in the interview, using non-verbal skills and an appropriate level of language
- following up on the interview

Media Texts

3.4 produce oral and/or oral-visual media texts of some technical complexity, using appropriate forms, conventions, and techniques *(e.g., produce a short video explaining how to prepare for a job interview)*

Using Effective Presentation Skills

3.5 adapt presentation strategies according to the audience's verbal and non-verbal responses to maintain or increase effectiveness of delivery *(e.g., present a short oral presentation a second time, using criticism provided by the audience at the first presentation to make improvements)*

4. Reflecting on Oral and Oral-Visual Communication Skills and Strategies

By the end of this course, students will:

Metacognition

4.1 identify the strategies they found most helpful in producing and interpreting oral and oral-visual communications *(e.g., identify the listening skills they used in a simulated job interview that were most appropriate)*

Setting Goals

4.2 identify their oral communication strengths and weaknesses, and set goals for strengthening the areas in which they need improvement

READING AND INTERPRETATION

OVERALL EXPECTATIONS

By the end of this course, students will:

1. identify a variety of reading strategies and use them appropriately before, during, and after reading to understand ideas and information in increasingly challenging texts;
2. identify and describe the form, structure, and stylistic elements in a variety of modern literary texts from various cultures, and informational texts, including media texts, produced for a variety of audiences and purposes;
3. demonstrate a range of critical literacy skills by analysing and assessing overt and implied messages in a text, the author's use of stylistic techniques, and the perspectives presented in the text;
4. analyse their skills as readers and interpreters of texts and set goals for improvement.

SPECIFIC EXPECTATIONS

1. Comprehending and Interpreting

By the end of this course, students will:

Purpose

1.1 choose reading materials that are appropriate for an assigned purpose and adapt their reading style to suit both the purpose and the style of the texts *(e.g., skim a short contract to identify important information)*

Demonstrating Understanding

1.2 summarize the main ideas and supporting details in texts, identifying relevant information for an assigned task *(e.g., summarize key ideas in reports and highlight supporting details)*

Making Inferences

1.3 develop interpretations of increasingly complex texts, using stated and implied ideas from the texts to support their interpretations *(e.g., identify the hidden message in TV ads for a video game and explain its presence in the ads)*

Analysing Texts

1.4 analyse the characteristics and elements of style in a variety of texts and explain how they contribute to the meaning of the text and influence the reader's reaction *(e.g., explain how repetition in the lyrics of a song reinforce the theme of the song)*

Extending Understanding

1.5 extend understanding of texts by connecting the ideas in them to their own knowledge, experiences, and insights; to other texts; and to the world around them *(e.g., identify a song that has a connection with their own experiences and describe the connection)*

2. Understanding Forms and Their Characteristics

By the end of this course, students will:

Fiction/Literature

2.1 read a range of contemporary literature from different cultures (short stories, poems, plays, novels, biographies/autobiographies) and explain how the elements of stories *(e.g., plot, theme, conflict, character, setting)* and the literary/stylistic techniques *(e.g., suspense, description, figure of speech)* work together to communicate meaning and enhance their effectiveness

Informational Texts

2.2 read a range of print and electronic reports and articles, and explain how their text patterns, text features, and other characteristics, including the following, help convey information effectively:

- introduction
- body

- conclusion
- presentation of information
- point of view
- level of language

2.3 read a variety of types of correspondence from various print and electronic sources *(e.g., thank-you letters, letters requesting an interview, responses to job postings from classified ads, responses to notices on employment-centre bulletin boards, e-mail)*, and explain how their text patterns, text features, and other characteristics, including the following, help convey information effectively:

- layout
- organization of information
- main and supporting information
- level of language

Persuasive Texts

2.4 read a range of persuasive texts *(e.g., letters of complaint, letters to the editor)* from various print and electronic sources, and explain how their text patterns, text features, and other characteristics, including the following, help convey information effectively:

- topic sentence
- thesis statement
- structure of arguments/organization of information
- level of language
- persuasive and rhetorical devices

Media Texts

2.5 interpret a range of media texts, explaining how their elements, conventions, and techniques vary according to purpose and audience *(e.g., analyse the persuasive techniques used in the cover and ads for a video game aimed at 12- to 16-year-old boys)*

3. Applying Critical Literacy Skills

By the end of this course, students will:

Evaluating Texts

3.1 evaluate the quality and effectiveness of a text, basing their assessment on evidence from the text, on previous knowledge, and on comparisons with other texts *(e.g., evaluate whether the graphic elements in health and safety manuals aid reader comprehension of the safe workplace practices outlined in the manuals)*

Assessing Information

3.2 recognize and challenge false, incomplete, or misleading information and bias, stereotypes, and prejudice in texts *(e.g., determine whether the lyrics in a song contain bias or promote stereotypes)*

Production Perspective

3.3 identify who produces various media texts and determine their interests and/or perspectives, and describe how the texts both shape and reflect values, trends, and behaviour in society *(e.g., examine CD covers, determining whether they promote questionable values)*

Author

3.4 explain how the life of an author, including his or her cultural and social background, can influence a text *(e.g., determine whether William Bell's experience as a high school teacher in Orillia influenced him in his choice of setting and characters in the novel* Stones*)*

4. Reflecting on Reading and Interpretation Skills and Strategies

By the end of this course, students will:

Metacognition

4.1 identify the strategies they used before, during, and after reading, and identify which of them were most helpful in interpreting texts *(e.g., explain how reviewing the meanings of technical words and of words that were new to them before reading a text containing these words improved their comprehension of the text)*

Setting Goals

4.2 identify their reading and interpretation strengths and weaknesses, and set goals for strengthening the areas in which they need improvement

WRITING AND REPRESENTATION

OVERALL EXPECTATIONS

By the end of this course, students will:

1. use a variety of pre-writing strategies to generate ideas, and plan the content and organization of texts effectively and according to their purpose and audience;
2. apply strategies to select, organize, and document information for research purposes from a variety of texts and electronic resources;
3. write texts in a variety of forms and for various media, applying their knowledge of the stylistic techniques and other characteristics associated with each form;
4. revise, edit, and publish their texts to refine expression, correct errors, and present their work effectively;
5. analyse their writing and producing strategies and set goals for improvement.

SPECIFIC EXPECTATIONS

1. Developing and Organizing Content

By the end of this course, students will:

Purpose and Audience

1.1 use a variety of pre-writing strategies to determine a purpose and audience and generate topics for a text, and to develop ideas and arguments for the text and locate information that will support the ideas and arguments *(e.g., brainstorm the contents of a letter to the editor on an issue affecting teenagers, such as curfews, in a small group)*

Organizing

1.2 sort, classify, and order main and supporting ideas and details by manipulating and organizing them into units that could be used for writing a text *(e.g., use index cards to help organize events and scenes before writing a mystery short story)*

2. Researching

By the end of this course, students will:

Planning Their Research

2.1 determine the focus of their research and develop a plan for gathering information *(e.g., brainstorm for sources of information on an assigned topic)*

Researching and Recording

2.2 locate and select research material, and summarize and/or paraphrase important ideas and information, making records of all sources in order to cite them and avoid plagiarism *(e.g., record citation information on sources they intend to use to support their thesis in a report)*

Preparing an Outline

2.3 identify main and supporting ideas and information, and organize key points by determining a logical order in which to present them *(e.g., use a point-form outline to organize arguments for a letter to the editor or a letter of complaint)*

Incorporating Sources

2.4 cite evidence and examples to support ideas and information *(e.g., incorporate information from valid sources to support their argument in a letter to the editor)*

Respecting Methodology

2.5 apply the basic elements of a standard method for presenting information in a text, including the title page, table of contents, and references *(e.g., use the MLA [Modern Language Association] or the APA [American Psychological Association] method for citing references)*

3. Applying Knowledge of Forms and Techniques

By the end of this course, students will:

Creative Texts

3.1 write short creative texts *(e.g., mysteries, various kinds of poetry)* in which they do the following:

- integrate the appropriate literary elements *(e.g., a focus on plot and action, realistic dialogue, creation of atmosphere)*
- use figures of speech
- use an original theme

Informational Texts

3.2 write a basic report *(e.g., sports/cultural broadcast on a school-related activity)* that includes the following:

- an opening lead *(e.g., five Ws [who, what, where, when,* and *why])*
- precise, factual details
- an objective point of view
- action words, descriptive adjectives, and adverbs

3.3 write short expository texts *(e.g., instructions on how to perform a task)* that make use of the following:

- point-form techniques
- a logical order *(e.g., chronological order)*
- verbs in the imperative *(e.g., do, take, locate)*
- precise vocabulary pertaining to the task *(e.g., use of technical terms)*

3.4 write a variety of types of correspondence *(e.g., résumés, thank-you letters, letters requesting interviews, responses to job postings from classified ads, responses to notices on employment centre bulletin boards, e-mail)*, focusing on the following:

- organizational elements *(e.g., heading, salutation, body, closing of a letter)*
- use of the appropriate level of language and tone *(e.g., language showing courtesy in requesting a job)*
- appropriate and precise word choice

Persuasive Texts

3.5 write short persuasive texts for a specific purpose *(e.g., letters of complaint, letters to the editor)* that use the following:

- clear language
- accurate information
- a forceful conclusion

3.6 write clear and well-organized responses to questions about texts under study, using the following:

- a clear opening sentence
- specific facts, examples, explanations, or reasons
- an effective conclusion

Media Texts

3.7 produce media texts that have the elements, conventions, and techniques associated with their form, purpose, and audience *(e.g., create the cover or an advertisement for a video game)*

4. Revising, Editing, and Publishing Texts

By the end of this course, students will:

Revising

4.1 make revisions to improve the content, clarity, and interest of their written work, and the appropriateness of its tone, using feedback from the teacher and their peers and focusing on the following:

- appropriate transitions between ideas and information
- accuracy of information
- diction that is appropriate to the topic and the audience
- words and phrases that emphasize important ideas or create an impression
- a variety of sentence types, structures, and lengths
- writing techniques to achieve particular effects *(e.g., use of action verbs and vivid adjectives and adverbs to create excitement when writing a mystery)*

Editing

4.2 edit and proofread their work, using a variety of reference materials *(e.g., print and online dictionaries, thesauruses, glossaries, spell-check programs)* and applying the language conventions listed on page 62

Publishing

4.3 produce final drafts, using a variety of technological resources to format their work and enhance its presentation *(e.g., prepare professional-looking correspondence using a variety of word processing features)*

5. Reflecting on Writing and Representation Skills and Strategies

By the end of this course, students will:

Metacognition

5.1 identify the skills and strategies they used in the process of writing and producing texts *(e.g., identify which tools or resources helped them the most in the revising and editing stages of their work on a particular assignment)*

Setting Goals

5.2 identify their writing and producing skills and weaknesses, and set goals for strengthening the areas in which they need improvement

Language Conventions

In drafting, revising, editing, and proofreading their texts, students will apply their knowledge of the language conventions appropriate for their grade. In this course, students will:

Sentence Structure

- identify and correct errors in sentence structure;
- construct complex and compound-complex sentences correctly;

Use of Verbs

- apply the rules of subject-verb agreement;
- avoid inappropriate shifts in verb tenses;

Use of Other Parts of Speech

- use pronouns and pronoun case forms correctly;
- use a variety of transitional devices to connect ideas *(e.g., however, on the other hand, first, second)*;
- distinguish between words that sound alike but have different meanings *(e.g., affect, effect; hear, here)*;

Spelling

- spell common words and specialized, workplace-related words correctly;
- use a variety of strategies to spell words correctly *(e.g., knowledge of root words, knowledge of the meaning of prefixes; knowledge of French; online resources, including dictionaries)*;

Punctuation and Capitalization

- use periods, question marks, exclamation marks, commas, semicolons, colons, apostrophes, quotation marks, and hyphens correctly;
- apply the rules for capitalizing place names, company and organizational names, names of buildings, elements of addresses, historical events, titles of books, and parts of letters.

English, Grade 12

University Preparation — EAE4U

This course emphasizes the development of literacy, communication, and creative and critical thinking skills that are necessary for success in academic and daily life. Students will analyse challenging literary texts from various countries, periods, and cultures, as well as a range of informational and media texts; produce a variety of creative, persuasive, and analytical written and media texts; and apply their knowledge of oral communication skills in a variety of formal and informal contexts. Important focuses are independent research, the creative and precise use of language, clear expression, and speaking with fluency and confidence.

Prerequisite: English, Grade 11, University Preparation

ORAL AND ORAL-VISUAL COMMUNICATION

OVERALL EXPECTATIONS

By the end of this course, students will:

1. use active listening strategies and higher-order thinking skills to interpret, make inferences about, and respond to a variety of situations for a variety of purposes;
2. use appropriate speaking skills and strategies when communicating in formal and informal situations;
3. prepare and deliver a variety of independent and collaborative oral and oral-visual communications, using appropriate forms, conventions, and techniques;
4. analyse their listening and speaking strategies and set goals to improve their oral communication skills.

SPECIFIC EXPECTATIONS

1. Listening and Responding

By the end of this course, students will:

Using Active Listening Strategies

1.1 use a variety of active listening strategies in a range of situations, including working in groups, selecting them according to the purpose of the situation *(e.g., summarize the contributions of others while leading and contributing to discussions about how to modernize a scene from one of Shakespeare's plays)*

Comprehension Strategies

1.2 identify and use a range of comprehension strategies to understand and clarify the meaning of complex and challenging oral communications *(e.g., rephrase ideas and arguments heard in oral critiques)*

Analysing Texts

1.3 identify information, ideas, and point of view in a variety of oral communications, and analyse the strategies used in them to inform, persuade, or entertain *(e.g., identify the supporting arguments and organizational patterns in an oral review, and evaluate the effectiveness of its persuasive techniques and rhetorical elements)*

Making Inferences

1.4 make inferences about messages in increasingly complex texts, using the language of the text and oral and visual cues to support their interpretations *(e.g., explain how sound effects in the opening scene of the BBC film of* Hamlet *create a chilly atmosphere)*

Critical Literacy

1.5 express and defend opinions on the content, tone, perspectives, and/or biases in oral communications *(e.g., specify what appeals to them in music videos and explain why these elements appeal to them and others in the target audience)*

Understanding Elements, Conventions, and Techniques

1.6 identify the elements, conventions, and techniques used in a variety of oral and oral-visual communications, and explain how they convey meaning, and influence and engage an audience *(e.g., explain how the use of props such as costumes and furniture enhances the effectiveness of a production of a play)*

2. Speaking Skills

By the end of this course, students will:

Using Appropriate Language

2.1 use appropriate words, phrases, and terminology, as well as inclusive and non-discriminatory language, to communicate precisely and effectively *(e.g., use specialized vocabulary in seminar presentations, explaining words and terms with which members of the audience may not be familiar)*

Stylistic Devices

2.2 use stylistic devices to illustrate ideas and to engage a specific audience *(e.g., use analogy when discussing key features of a work in an oral view of the work)*

Clarity and Coherence

2.3 communicate in a clear and coherent manner, presenting information and ideas in ways that are appropriate for the purpose, subject matter, and audience *(e.g., present a satirical poem about a current event, using inflection to enhance the humour)*

Speaking Effectively

2.4 identify and use a range of vocal effects *(e.g., tone, pace, pitch, volume)* and non-verbal cues *(e.g., facial expressions, gestures, eye contact)* to communicate effectively and engage an audience *(e.g., vary tone of voice and use gestures to maintain the interest of others when speaking in a seminar)*

3. Preparing and Delivering Presentations

By the end of this course, students will:

Using a Process

3.1 use a process approach when producing independent or collaborative oral and oral-visual presentations *(e.g., time a multimedia presentation to determine whether its length is within the assigned time limit)*

Creative Performances

3.2 deliver an individual or a collaborative creative performance of their own or others' writing, including an adaptation *(e.g., deliver a modernized version of a soliloquy from one of Shakespeare's plays or of a dramatic monologue by Robert Browning)*

Formal Speaking

3.3 deliver a formal presentation *(e.g., seminar linked to an independent study unit)* that is based on analysis and research, that adheres to a teacher-prescribed time limit, and that includes the following:

- a captivating introduction, a thesis, development of the thesis with a minimum of three main arguments, and a powerful conclusion
- synthesis of research, organization of ideas, relevant examples, and different types of evidence for emphasis and effect
- unity and coherence
- properly documented research, including citing of sources to avoid plagiarism
- effective and creative multimedia elements *(e.g., presentation software, video)*
- persuasive language
- effective delivery *(e.g., timing, pacing, intonation)*
- audience involvement
- originality
- a clear, complete, correct, and visually appealing handout

3.4 present an oral critique *(e.g., of a novel, play, or movie under study)* that includes the following:

- an introduction that features:
  - a strong hook that creates interest through the use of a rhetorical question, a startling statement, or an excerpt from the text
  - the title of the text and a short synopsis
  - a list of the key ideas to be developed
- relevant ideas and examples to support the findings
- effective audio-visual aids *(e.g., video, props)*
- colourful diction that reveals the personality of the reviewer
- effective delivery *(e.g., timing, fluidity, intonation)*
- a strong conclusion that either comes full circle or ends in a forceful manner

Media Texts

3.5 produce oral and/or oral-visual media texts of some technical complexity, using appropriate forms, conventions, and techniques *(e.g., create a short audio or video documentary about a topic related to a text under study)*

Using Effective Presentation Skills

3.6 adapt presentation strategies according to the audience's verbal and non-verbal responses to maintain or increase effectiveness of delivery *(e.g., create opportunities for class participation in seminar presentations by adding questions or quizzes)*

4. Reflecting on Oral and Oral-Visual Communication Skills and Strategies

By the end of this course, students will:

Metacognition

4.1 identify the strategies they found most helpful in producing and interpreting oral and oral-visual communications *(e.g., identify which of the visual elements they used in a seminar presentation were most effective in maintaining class interest)*

Setting Goals

4.2 identify their oral communication strengths and weaknesses, and set goals for strengthening the areas in which they need improvement.

READING AND INTERPRETATION

OVERALL EXPECTATIONS

By the end of this course, students will:

1. identify a variety of reading strategies and use them appropriately before, during, and after reading to understand ideas and information in increasingly complex texts;
2. identify and describe the form, structure, and stylistic elements in a variety of literary texts, including modern texts and works from various historical periods and cultures, and in informational texts, including media texts, produced for a variety of audiences and purposes;
3. demonstrate a range of critical literacy skills by analysing and assessing overt and implied messages in a text, the author's use of stylistic techniques, and the perspectives presented in the text;
4. analyse their skills as readers and interpreters of texts and set goals for improvement.

SPECIFIC EXPECTATIONS

1. Comprehending and Interpreting

By the end of this course, students will:

Purpose

1.1 choose reading materials that are appropriate for an assigned purpose and adapt their reading style to suit both the purpose and the style of the texts *(e.g., read a selection of essays on a literary text to enhance their understanding of the text)*

Demonstrating Understanding

1.2 summarize the main ideas and supporting details in texts, identifying relevant information for an assigned task *(e.g., paraphrase key ideas in a complex essay and identify the evidence that supports the essay's thesis)*

Making Inferences

1.3 develop interpretations of increasingly complex texts, using stated and implied ideas from the texts to support their interpretations *(e.g., evaluate the effectiveness of two reviews of a film of one of Shakespeare's plays, using evidence from the reviews)*

Analysing Texts

1.4 analyse the characteristics and elements of style in a variety of increasingly complex texts and explain how they contribute to the meaning of the text and influence the reader's reaction *(e.g., analyse a narrative essay, focusing on how its structure, images, and figures of speech are used to convey the writer's thesis)*

Extending Understanding

1.5 extend understanding of texts by connecting the ideas in them to their own knowledge, experiences, and insights; to other texts; and to the world around them *(e.g., compare the actions of a character in a play by Shakespeare with those of a current political figure)*

2. Understanding Forms and Their Characteristics

By the end of this course, students will:

Fiction/Literature

2.1 read a range of literature from various periods and cultures (short stories, poems, modern and historical plays, and novels) and explain how the elements of stories *(e.g., plot, theme, conflict, character, setting)* and the literary/stylistic techniques *(e.g., dramatic irony, satire, parody, anecdote, paradox, pathetic fallacy, nemesis, figure of speech)* work together to communicate meaning and enhance their effectiveness

Informational Texts

2.2 read a range of informational texts (print and electronic reports, research papers and articles) and explain how their text patterns, text features, and other characteristics, including the following, help convey information effectively:

- presentation of information
- integration of researched facts
- graphics
- layout

- point of view
- level of language

Persuasive Texts

2.3 read a range of persuasive texts (critiques, essays) from various print and electronic sources, and explain how their text patterns, text features, and other characteristics, including the following, help convey information effectively:

- topic sentence
- thesis statement
- structure of arguments/organization of information
- level of language
- persuasive and rhetorical devices

2.4 read a variety of literary essays from various print and electronic sources, and explain how their text patterns, text features, and other characteristics, including the following, help convey information effectively *(e.g., explain how primary and secondary sources are used to support arguments in a literary essay)*:

- topic sentence
- thesis statement
- structure of arguments/organization of information
- level of language
- research
- persuasive and rhetorical devices

Media Texts

2.5 interpret a range of media texts, explaining how their elements, conventions, and techniques vary according to purpose and audience *(e.g., identify a variety of effective informational websites and explain why they are effective)*

3. Applying Critical Literacy Skills

By the end of this course, students will:

Evaluating Texts

3.1 evaluate the quality and effectiveness of a text, basing their assessment on evidence from the text, on previous knowledge, and on comparisons with other texts *(e.g., determine whether the use of counter-arguments in a work being read as part of an independent study project helped solidify the writer's thesis)*

Assessing Information

3.2 recognize and challenge false, incomplete, or misleading information and bias, stereotypes, and prejudice in texts *(e.g., identify literary works that have themes in which race or nationality and prejudice are factors)*

Production Perspective

3.3 identify who produces various media texts and determine their interests and/or perspectives, and describe how the texts both shape and reflect values, trends, and behaviour in society *(e.g., compare news articles regarding a current Aboriginal event or issue published in a mainstream newspaper and an Aboriginal newspaper and explain the different perspectives presented in the texts)*

Author

3.4 explain how the life of an author, including his or her cultural and social background, can influence a text *(e.g., determine whether Margaret Atwood's feminist views influenced her in the writing of* The Handmaid's Tale*)*

4. Reflecting on Reading and Interpretation Skills and Strategies

By the end of this course, students will:

Metacognition

4.1 identify the strategies they used before, during, and after reading, and identify which of them were most helpful in interpreting texts *(e.g., explain how reading the annotations in a complex text helped them interpret the text)*

Setting Goals

4.2 identify their reading and interpretation strengths and weaknesses, and set goals for strengthening the areas in which they need improvement

WRITING AND REPRESENTATION

OVERALL EXPECTATIONS

By the end of this course, students will:

1. use a variety of pre-writing strategies to generate ideas, and plan the content and organization of texts effectively and according to their purpose and audience;
2. apply strategies to select, assess, organize, and document information for research purposes from a variety of texts and electronic resources;
3. write texts in a variety of forms and for various media, applying their knowledge of stylistic techniques and other characteristics associated with each form;
4. revise, edit, and publish their texts to refine expression, correct errors, and present their work effectively;
5. analyse their writing and producing strategies and set goals for improvement.

SPECIFIC EXPECTATIONS

1. Developing and Organizing Content

By the end of this course, students will:

Purpose and Audience

1.1 use a variety of pre-writing strategies to determine a purpose and audience and generate topics for a text, and to develop ideas and arguments for the text and locate information that will support the ideas and arguments *(e.g., generate a research question that will provide a clear focus for an independent study project; identify key words for an Internet search as part of their research on a topic)*

Organizing

1.2 sort, classify, and order main and supporting ideas and details by manipulating and organizing them into units that could be used for writing a text *(e.g., use charts to classify information gathered for an independent study project)*

2. Researching

By the end of this course, students will:

Planning Their Research

2.1 determine the focus of their research and develop a plan for gathering information *(e.g., create a list of sources of information for arguments they will use to support their thesis)*

Researching and Recording

2.2 locate, select, and assess research material, and summarize and/or paraphrase important ideas and information, making records of all sources in order to cite them and avoid plagiarism *(e.g., assess research material for an independent study project, focusing on validity, relevance, accuracy, objectivity, and clarity)*

Preparing an Outline

2.3 identify main and supporting ideas and information, and organize key points by determining a logical order in which to present them *(e.g., use a point-form outline to organize main and supporting ideas)*

Incorporating Sources

2.4 cite evidence and examples to support ideas and information *(e.g., incorporate information from sources when needed to support their arguments, ensuring that the author's intended message is unchanged and that direct quotations are accurately copied and cited, when writing a research paper)*

Respecting Methodology

2.5 apply the basic elements of a standard method for presenting information in a text, including the title page, table of contents, and references *(e.g., use the MLA [Modern Language Association] or the APA [American Psychological Association] method for citing references)*

3. Applying Knowledge of Forms and Techniques

By the end of this course, students will:

Creative Texts

3.1 write complex creative texts in a variety of lengths *(e.g., narrative essay, satirical poem about a current event or issue, dramatic scene, short story)* that include the following:

- rhetorical and literary/stylistic devices *(e.g., a motif, a rhetorical question, satire)*
- organizational patterns *(e.g., chronological order, flashbacks or flashforwards)*
- transitional devices to show relationships between ideas and to ensure clarity and coherence

Informational Texts

3.2 write an in-depth research paper of 1500 words as part of an independent study project that synthesizes ideas and information and that includes the following:

- an introduction that features a focused research question and a well-formulated thesis statement
- convincing supporting arguments and relevant evidence from a range of print and electronic resources, cited according to an accepted system of documentation *(e.g., MLA [Modern Language Association], APA [American Psychological Association])*
- a conclusion synthesizing the key research findings
- an appendix containing additional relevant information

Persuasive Texts

3.3 write a critique *(e.g., on a movie, play, novel)* that includes the following:

- an attention-grabbing hook and a definite position
- a balance of value judgements and facts
- an expressive, original style that reveals the writer's personality

3.4 write a literary essay containing at least 1000 words that is based on the interpretation and analysis of a literary text or a controversial issue and that includes the following:

- a well-developed introduction that features a general statement, a sentence that acts as a lead-in to the topic, and a thesis statement that clearly states the writer's position
- body paragraphs that support the thesis with examples, quotations, and other evidence from primary and secondary sources
- accurate citations to all sources, styled according to an accepted system of documentation *(e.g., MLA [Modern Language Association], APA [American Psychological Association])*
- arguments that incorporate various points of view, including a counter-argument
- a concluding paragraph that summarizes the writer's position

3.5 write coherent and complex essay-type responses to questions on literary texts under study that include the following:

- a clear and well-focused introduction
- paragraphs that develop the thesis and present supporting evidence
- a concluding paragraph that summarizes key ideas developed in the essay

Media Texts

3.6 produce media texts applying the elements, conventions, and techniques associated with their form, purpose, and audience *(e.g., create a website related to a text under study or an essay they have written)*

4. Revising, Editing, and Publishing Texts

By the end of this course, students will:

Revising

4.1 make revisions to improve the content, clarity, and interest of their written work, and the appropriateness of its tone, using feedback from the teacher and their peers and focusing on the following:

- research that is smoothly incorporated
- a level of language that is appropriate for the target audience
- words and phrases that emphasize important ideas and make an impression on the target audience
- a thesis that is clear and of a narrow or wide enough focus to suit the specified length of the assignment
- readability
- arguments supported by evidence
- a variety of sentence types and structures
- stylistic techniques to achieve particular effects *(e.g., use contemporary diction and a rap style in modernizing a scene from Shakespeare)*

Editing

4.2 edit and proofread their work, using a variety of reference materials *(e.g., print and online dictionaries, thesauruses, glossaries, spell-check programs)* and applying the language conventions listed on page 71

Publishing

4.3 produce final drafts, using a variety of technological resources to format their work and enhance its presentation *(e.g., use a variety of the features of a word-processing program to edit texts)*

5. Reflecting on Writing and Representation Skills and Strategies

By the end of this course, students will:

Metacognition

5.1 identify the skills and strategies they used in the process of writing and producing texts *(e.g., determine which piece of writing they are most proud of and identify the strategies they used to produce it)*

Setting Goals

5.2 identify their writing and producing skills and weaknesses, and set goals for strengthening the areas in which they need improvement

Language Conventions

In drafting, revising, editing, and proofreading their texts, students will apply their knowledge of the language conventions appropriate for their grade. In this course, students will:

Sentences/Syntax

- construct complex and compound-complex sentences correctly;
- use parallel grammatical constructions for parallel ideas;
- write clear and complete sentences, occasionally varying the order of sentence parts *(e.g., invert the order of the subject and the verb)*;
- use appositive, prepositional, and verbal phrases to achieve clarity and add variety and emphasis in written work;

Use of Verbs

- recognize the present subjunctive and past subjunctive forms of verbs and use them to express speculation, wishes, and indirect demands;

Use of Other Parts of Speech

- use pronoun case forms correctly;
- avoid gender bias when using pronouns;
- use linking words and repeat parallel phrases and structures to indicate transitions in and between paragraphs;
- use coordinating, subordinating, and correlative conjunctions correctly in a variety of sentences;

Punctuation

- use punctuation to clarify meaning, add emphasis, and for rhythm *(e.g., read written work aloud to ensure sentences are punctuated as they are intended to be heard)*;
- use punctuation correctly;
- use commas with non-restrictive clauses and contrasting expressions;
- use semicolons between independent clauses;
- use the dash to indicate a break in thought;
- use a colon at the end of the introduction to a list, after salutations, and to separate the title and subtitle of a book in a bibliographical entry;
- use single quotation marks for a quotation within a quotation, and double quotation marks for the titles of essays;
- use ellipsis dots to indicate omissions in material being quoted;
- use square brackets to indicate additions to quoted material;

Spelling

- use a variety of aids and strategies to spell words correctly *(e.g., electronic resources, knowledge of root words and spelling patterns, peer conferencing, checklist of frequently misspelled words)*.

English, Grade 12

College Preparation EAE4C

This course emphasizes the development of literacy, communication, and creative and critical thinking skills that are necessary for success in academic and daily life. Students will analyse and respond critically to literary texts from contemporary and historical periods and from a variety of countries and cultures, as well as to a range of informational and media texts; create texts in a variety of forms for practical and academic purposes; and consolidate their knowledge of effective oral communication. Important focuses are using language with precision and clarity, establishing an appropriate voice for specific purposes and audiences, and incorporating stylistic devices appropriately and effectively.

Prerequisite: English, Grade 11, College Preparation

ORAL AND ORAL-VISUAL COMMUNICATION

OVERALL EXPECTATIONS

By the end of this course, students will:

1. use active listening strategies and higher-order thinking skills to interpret, make inferences about, and respond to a variety of situations for a variety of purposes;
2. use appropriate speaking skills and strategies when communicating in formal and informal situations;
3. prepare and deliver a variety of independent and collaborative oral and oral-visual communications, using appropriate forms, conventions, and techniques;
4. analyse their listening and speaking strategies and set goals to improve their oral communication skills.

SPECIFIC EXPECTATIONS

1. Listening and Responding

By the end of this course, students will:

Using Active Listening Strategies

1.1 use a variety of active listening strategies in a range of situations, including working in groups, selecting them according to the purpose of the situation *(e.g., summarize the opinions and ideas of others after participating in a group discussion on writing a dramatic scene)*

Comprehension Strategies

1.2 identify and use a range of comprehension strategies to understand and clarify the meaning of complex and challenging oral communications *(e.g., research and prepare notes on a debate topic prior to listening to the debate)*

Analysing Texts

1.3 identify information, ideas, and point of view in a variety of communications, and analyse the strategies used in them to inform, persuade, or entertain *(e.g., identify persuasive techniques used in a debate and evaluate their effectiveness)*

Making Inferences

1.4 make inferences about messages using the language of the text and oral and visual cues to support their interpretations *(e.g., explain how attractive packaging and the use of irony and humour in ads can help increase the sales of products)*

Critical Literacy

1.5 express and defend opinions on the content, tone, perspectives, and/or biases in oral communications *(e.g., list some of the ways stories presented in newscasts may contain bias and provide examples from newscasts)*

Understanding Elements, Conventions, and Techniques

1.6 identify the elements, conventions, and techniques used in a variety of oral and oral-visual communications, and explain how they convey meaning, and influence and engage an audience *(e.g., assess to what degree techniques such as music and camera angle are important in making a video for an educational campaign)*

2. Speaking Skills

By the end of this course, students will:

Using Appropriate Language

2.1 use appropriate words, phrases, and terminology, as well as inclusive and non-discriminatory language, to communicate precisely and effectively *(e.g., adapt vocabulary and level of language to suit formal and informal communications)*

Stylistic Devices

2.2 use stylistic devices to illustrate ideas and to engage a specific audience *(e.g., use irony to make an impression in a debate)*

Clarity and Coherence

2.3 communicate in a clear and coherent manner, presenting information and ideas in ways that are appropriate for the purpose, subject matter, and audience *(e.g., present a summary of their education and work experience in an interview, giving precise and relevant details where appropriate)*

Speaking Effectively

2.4 identify and use a range of vocal effects *(e.g., tone, pace, pitch, volume)* and non-verbal cues *(e.g., facial expressions, gestures, eye contact)* to communicate effectively and engage an audience *(e.g., use tempo and mannerisms suited to the character they are portraying in a play)*

3. Preparing and Delivering Presentations

By the end of this course, students will:

Using a Process

3.1 use a process approach when producing independent or collaborative oral and oral-visual presentations *(e.g., research and practise the voice and mannerisms of a historical character in preparation for playing the character in a play)*

Creative Performances

3.2 deliver an individual or a collaborative creative performance of their own or others' writing, including an adaptation *(e.g., create an audiotape or a video promoting themselves to a prospective employer or to a college or university they would like to attend)*

Formal Speaking

3.3 present a debate that adheres to Ontario Student Debating Union procedures and time constraints, and that includes the following:

- a powerful opening
- attention to the thesis
- persuasive devices *(e.g., tone, emphasis, repetition)*
- arguments and counter-arguments for rebuttal *(e.g., open, closed, and rhetorical questions)*
- use of notes taken during the debate for rebuttal
- a concise summary of supporting arguments to bring closure

Media Texts

3.4 produce oral and/or oral-visual media texts of some technical complexity, using appropriate forms, conventions, and techniques *(e.g., prepare a multimedia presentation on a topic that is currently an issue in the community)*

Using Effective Presentation Skills

3.5 adapt presentation strategies according to the audience's verbal and non-verbal responses to maintain or increase effectiveness of delivery *(e.g., practise their interview skills by video recording a series of mock interviews, using the advice of their peers and teacher to improve their delivery)*

4. Reflecting on Oral and Oral-Visual Communication Skills and Strategies

By the end of this course, students will:

Metacognition

4.1 identify the strategies they found most helpful in producing and interpreting oral and oral-visual communications *(e.g., identify which aspects of their body language and use of gesture and facial expressions were effective while watching a video of a debate in which they participated)*

Setting Goals

4.2 identify their oral communication strengths and weaknesses, and set goals for strengthening the areas in which they need improvement

READING AND INTERPRETATION

OVERALL EXPECTATIONS

By the end of this course, students will:

1. identify a variety of reading strategies and use them appropriately before, during, and after reading to understand ideas and information in increasingly challenging texts;
2. identify and describe the form, structure, and stylistic elements in a variety of literary texts, including modern texts and works from various historical periods and cultures, and in informational texts, including media texts, produced for a variety of audiences and purposes;
3. demonstrate a range of critical literacy skills by analysing and assessing overt and implied messages in a text, the author's use of stylistic techniques, and the perspectives presented in the text;
4. analyse their skills as readers and interpreters of texts and set goals for improvement.

SPECIFIC EXPECTATIONS

1. Comprehending and Interpreting

By the end of this course, students will:

Purpose

1.1 choose reading materials that are appropriate for an assigned purpose and adapt their reading style to suit both the purpose and the style of the texts *(e.g., choose reader-friendly websites by evaluating the organization of information on their home pages when doing research on college programs)*

Demonstrating Understanding

1.2 summarize the main ideas and supporting details in texts, identifying relevant information for an assigned task *(e.g., use information from charts in a business report to summarize the contents)*

Making Inferences

1.3 develop interpretations of increasingly complex texts, using stated and implied ideas from the texts to support their interpretations *(e.g., evaluate the arguments in an essay that addresses a topical issue, such as teen violence, by determining whether the evidence presented supports the arguments)*

Analysing Texts

1.4 analyse the characteristics and elements of style in a variety of texts and explain how they contribute to the meaning of the text and influence the reader's reaction *(e.g., analyse the effect of short paragraphs on the reader)*

Extending Understanding

1.5 extend understanding of texts by connecting the ideas in them to their own knowledge, experiences, and insights; to other texts; and to the world around them *(e.g., compare the values represented in an editorial with their own)*

2. Understanding Forms and Their Characteristics

By the end of this course, students will:

Fiction/Literature

2.1 read a range of literature from various periods and cultures (short stories, poems, modern and historical plays, and novels) and explain how the elements of stories *(e.g., plot, theme, conflict, character, setting)* and the literary/stylistic techniques *(e.g., irony, satire, parody, motif, paradox, figure of speech)* work together to communicate meaning and enhance their effectiveness

Informational Texts

2.2 read a range of print and electronic reports, research papers, and articles, and explain how their text patterns, text features, and other characteristics, including the following, help convey information effectively:

- presentation of information
- integration of researched facts
- graphics
- layout
- point of view
- level of language

2.3 read a variety of types of correspondence *(e.g., memos, press releases, proposals, letters of complaint, letters requesting donations)* from various print and electronic sources and explain how their text patterns, text features, and other characteristics, including the following, help convey information effectively:

- layout
- organization of information
- main and supporting information
- level of language

Persuasive Texts

2.4 read a range of persuasive texts (editorials, persuasive essays) from various print and electronic sources and explain how their text patterns, text features, and other characteristics, including the following, help convey information effectively:

- topic sentence
- thesis statement
- structure of arguments/organization of information
- level of language
- persuasive and rhetorical devices

Media Texts

2.5 interpret a range of media texts, explaining how their elements, conventions, and techniques vary according to purpose and audience *(e.g., identify the techniques used in promotional videos)*

3. Applying Critical Literacy Skills

By the end of this course, students will:

Evaluating Texts

3.1 evaluate the quality and effectiveness of a text, basing their assessment on evidence from the text, on previous knowledge, and on comparisons with other texts *(e.g., determine whether a video they created to promote themselves is effective by comparing it with videos for products or services that have impressed them)*

Assessing Information

3.2 recognize and challenge false, incomplete, or misleading information and bias, stereotypes, and prejudice in texts *(e.g., determine whether the word choice in an editorial indicates prejudice)*

Production Perspective

3.3 identify who produces various media texts and determine their interests and/or perspectives, and describe how the texts both shape and reflect values, trends, and behaviour in society *(e.g., determine whether slogans in political campaign ads reflect values and trends)*

Author

3.4 explain how the life of an author, including his or her cultural and social background, can influence a text *(e.g., analyse the degree to which George Bernard Shaw's views on the different levels of English society influenced him in his creation of the characters and themes in* Pygmalion*)*

4. Reflecting on Reading and Interpretation Skills and Strategies

By the end of this course, students will:

Metacognition

4.1 identify the strategies they used before, during, and after reading, and identify which of them were most helpful in interpreting texts *(e.g., explain how keeping a reading journal helped them clarify their thoughts about the texts they read)*

Setting Goals

4.2 identify their reading and interpretation strengths and weaknesses, and set goals for strengthening the areas in which they need improvement

WRITING AND REPRESENTATION

OVERALL EXPECTATIONS

By the end of this course, students will:

1. use a variety of pre-writing strategies to generate ideas, and plan the content and organization of texts effectively and according to their purpose and audience;
2. apply strategies to select, assess, organize, and document information for research purposes from a variety of texts and electronic resources;
3. write texts in a variety of forms and for various media, applying their knowledge of the stylistic techniques and other characteristics associated with each form;
4. revise, edit, and publish their texts to refine expression, correct errors, and present their work effectively;
5. analyse their writing and producing strategies and set goals for improvement.

SPECIFIC EXPECTATIONS

1. Developing and Organizing Content

By the end of this course, students will:

Purpose and Audience

1.1 use a variety of pre-writing strategies to determine a purpose and audience and generate topics for a text, and to develop ideas and arguments for the text and locate information that will support the ideas and arguments *(e.g., conduct a class survey to generate topics for a research paper)*

Organizing

1.2 sort, classify, and order main and supporting ideas and details by manipulating and organizing them into units that could be used for writing a text *(e.g., use index cards to classify key arguments and supporting evidence for a persuasive essay)*

2. Researching

By the end of this course, students will:

Planning Their Research

2.1 determine the focus of their research and develop a plan for gathering information *(e.g., list possible sources of information for a report on the benefits of making healthier food available in their school's cafeteria)*

Researching and Recording

2.2 locate and select research material, and summarize and/or paraphrase important ideas and information, making records of all sources in order to cite them and avoid plagiarism *(e.g., write one- or two-sentence summaries of ideas found in source materials and keep track of citation information)*

Preparing an Outline

2.3 identify main and supporting ideas and information, and organize key points by determining a logical order in which to present them *(e.g., order the events leading to the climax in a dramatic scene logically)*

Incorporating Sources

2.4 cite evidence and examples to support ideas and information *(e.g., restate an author's ideas in their own words, crediting him or her for the ideas, and provide an accurate reference for the source in a research paper)*

Respecting Methodology

2.5 apply the basic elements of a standard method for presenting information in a text, including the title page, table of contents, and references *(e.g., use the MLA [Modern Language Association] or the APA [American Psychological Association] method for citing references)*

3. Applying Knowledge of Forms and Techniques

By the end of this course, students will:

Creative Texts

3.1 write creative texts *(e.g., short story, dramatic scene, poetry)* that include the following:

- a vivid setting
- strong conflict
- realistic characterization
- originality
- literary/stylistic devices *(e.g., imagery, juxtaposition)*

Informational Texts

3.2 write a research paper *(e.g., on a topic or issue of current interest, or that includes a theme related to such an issue or topic)* that includes the following:

- an effective introduction that includes a clear thesis statement
- convincing arguments and relevant evidence to support its thesis
- transitional devices to show relationships between ideas, sentences, and paragraphs and to ensure flow
- illustrations or charts that are appropriately integrated
- a forceful conclusion
- citation and documentation of all sources using standard methods *(e.g., MLA [Modern Language Association], APA [American Psychological Association])*

3.3 write a variety of types of correspondence *(e.g., memos, press releases, proposals, letters of complaint, letters requesting donations)*, focusing on the following:

- factual information
- formal language
- organizational elements *(e.g., heading, salutation, body, closing of a letter)*

Persuasive Texts

3.4 write an editorial that has:

- an enticing hook and a clear position
- relevant arguments and strong opinions
- a conclusion that includes a call to action

3.5 write a persuasive essay that includes:

- a clear introduction that includes a thesis statement
- body paragraphs that develop the argument logically
- a clear conclusion that sums up the argument
- transitional devices to ensure clarity and flow
- rhetorical devices and persuasive techniques *(e.g., repetition, rhetorical questions, subject-verb inversion)*
- effective use of a variety of types of research material *(e.g., statistics, examples, surveys, quotations)*

3.6 write essay-type responses to questions about texts under study that have:

- a clear introduction
- body paragraphs that contain references to key passages in the text and relevant support
- an effective conclusion that restates the essay's key ideas

Media Texts

3.7 produce media texts that have the elements, conventions, and techniques associated with their form, purpose, and audience *(e.g., create a video promoting themselves for acceptance at a college)*

4. Revising, Editing, and Publishing Texts

By the end of this course, students will:

Revising

4.1 make revisions to improve the content, clarity, and interest of their written work, and the appropriateness of its tone, using feedback from the teacher and their peers and focusing on the following:

- elimination of irrelevant details
- verification of information
- a level of language that is appropriate for the target audience
- words and phrases that emphasize important ideas and make an impression on the target audience
- readability
- arguments supported by evidence
- a variety of sentence types and structures
- stylistic techniques to achieve particular effects *(e.g., rhetorical questions and repetition for effect in a persuasive text)*

Editing

4.2 edit and proofread their work, using a variety of reference materials *(e.g., print and online dictionaries, thesauruses, glossaries, spell-check programs)* and applying the language conventions listed on page 81

Publishing

4.3 produce final drafts, using a variety of technological resources to format their work and enhance its presentation *(e.g., use publishing software to produce visually interesting promotional pamphlets)*

5. Reflecting on Writing and Representation Skills and Strategies

By the end of this course, students will:

Metacognition

5.1 identify the skills and strategies they used in the process of writing and producing texts *(e.g., identify which of the strategies they used in a writing conference with their teacher were beneficial)*

Setting Goals

5.2 identify their writing and producing skills and weaknesses, and set goals for strengthening the areas in which they need improvement

Language Conventions

In drafting, revising, editing, and proofreading their texts, students will apply their knowledge of the language conventions appropriate for their grade. In this course, students will:

Sentence Structure

- use parallel grammatical constructions for parallel ideas *(e.g., use same part of speech to begin each item in a list)*;
- avoid mixed constructions *(e.g., is when, is because)*, and illogical and/or confusing constructions *(e.g., double negatives)*;
- use appositive, prepositional, and verbal phrases for variety and to achieve clarity;

Use of Verbs

- apply the rules of subject-verb agreement;
- avoid inappropriate shifts in verb tenses;
- use the imperative form of verbs consistently in a list of instructions;

Use of Other Parts of Speech

- use pronoun case forms correctly;
- use a wide variety of transitional words and phrases to link parts of sentences, sentences in a paragraph, and paragraphs;
- use coordinating, subordinating, and correlative conjunctions, and other connectives correctly;

Spelling

- spell common business and technical words and literary terms correctly;
- use a variety of aids and strategies to spell words correctly *(e.g., electronic resources, peer conferencing, checklist of frequently misspelled words)*;

Punctuation and Capitalization

- use commas, semicolons, colons, apostrophes, quotation marks, hyphens, dashes, parentheses, square brackets, and ellipses correctly;
- apply the rules for capitalizing place names, company and organizational names, names of buildings, elements of addresses, historical events, parts of letters, titles of books, and abbreviations.

English, Grade 12

Workplace Preparation EAE4E

This course emphasizes the consolidation of the basic literacy skills – reading, writing, listening, and speaking – and critical thinking skills necessary for success in the workplace and in daily life. Students will interpret and respond critically to a range of informational texts, contemporary literary texts from Canada and other countries, and media texts; create a variety of literary, informational, and media texts; and examine and apply models of effective oral communication. Important focuses are using language accurately and organizing ideas and information coherently in texts produced for practical purposes.

Prerequisite: English, Grade 11, Workplace Preparation

ORAL AND ORAL-VISUAL COMMUNICATION

OVERALL EXPECTATIONS

By the end of this course, students will:

1. use active listening strategies and higher-order thinking skills to interpret, make inferences about, and respond to a variety of situations for a variety of purposes;
2. use appropriate speaking skills and strategies when communicating in formal and informal situations;
3. prepare and deliver a variety of independent and collaborative oral and oral-visual communications, using appropriate forms, conventions, and techniques;
4. analyse their listening and speaking strategies and set goals to improve their oral communication skills.

SPECIFIC EXPECTATIONS

1. Listening and Responding

By the end of this course, students will:

Using Active Listening Strategies

1.1 use a variety of active listening strategies in a range of situations, including working in groups, selecting them according to the purpose of the situation *(e.g., suggest compromises or other ways to arrive at a consensus in developing plot outlines for a one-act play when working in a small group)*

Comprehension Strategies

1.2 identify and use a range of comprehension strategies to understand and clarify the meaning of challenging oral communications *(e.g., record information while listening to a panel discussion and, after the discussion, ask panel members to confirm the meaning of anything that was unclear)*

Analysing Texts

1.3 identify information, ideas, and point of view in a variety of communications, and analyse the strategies used in them to inform, persuade, or entertain *(e.g., identify the strategies used to inform and persuade in a short video for an educational campaign)*

Making Inferences

1.4 make inferences about messages using the language of the text and oral and visual cues to support their interpretations *(e.g., analyse the effect of fashion magazines on men's and women's self-images and/or on their career interests)*

Critical Literacy

1.5 express and defend opinions on the content, tone, perspectives, and/or biases in oral communications *(e.g., express their opinion about how an issue affecting teenagers is being reported in the media, giving examples to support their point of view)*

Understanding Elements, Conventions and Techniques

1.6 identify the elements, conventions, and techniques used in a variety of oral and oral-visual communications, and explain how they convey meaning, and influence and engage an audience *(e.g., determine whether techniques such as music and camera angle made a promotional video more interesting)*

2. Speaking Skills

By the end of this course, students will:

Using Appropriate Language

2.1 use appropriate words, phrases, and terminology, as well as inclusive and non-discriminatory language, to communicate precisely and effectively *(e.g., use specialized vocabulary in an interview for a job requiring technical skills)*

Stylistic Devices

2.2 use stylistic devices to illustrate ideas and to engage a specific audience *(e.g., use hyperbole and metaphor when giving an opinion in an oral presentation)*

Expanding Vocabulary

2.3 use strategies to expand vocabulary *(e.g., keep a list of words and phrases and their meanings as they learn them)*

Clarity and Coherence

2.4 communicate in a clear and coherent manner, presenting information and ideas in ways that are appropriate to the purpose, subject matter, and audience *(e.g., deliver an opinion on a topic and back up the opinion in a speaker's-corner type of speech to their peers and teacher)*

Speaking Effectively

2.5 identify and use a range of vocal effects *(e.g., tone, pace, pitch, volume)* and non-verbal cues *(e.g., facial expressions, gestures, eye contact)* to communicate effectively and engage an audience *(e.g., use eye contact and maintain good posture when delivering a report on a biography or an autobiography)*

3. Preparing and Delivering Presentations

By the end of this course, students will:

Using a Process

3.1 use a process approach when producing independent or collaborative oral and oral-visual presentations *(e.g., learn and practise their lines to limit the use of cue cards when they are delivering a creative performance)*

Creative Performances

3.2 deliver an individual or a collaborative creative performance of their own or others' writing, including an adaptation *(e.g., perform one of the roles in a production of an alternative ending to a story under study in front of their class and teacher)*

Formal Speaking

3.3 deliver a career portfolio presentation, demonstrating the following skills:

- preparing answers to possible questions concerning the portfolio
- preparing the portfolio (*e.g., putting their résumé, awards, certificates in a folder)*
- researching the prospective job and place of employment
- practising speaking clearly and confidently *(e.g., working on pronunciation, tone, enunciation)*
- practising the use of an appropriate level of language
- practising the use of non-verbal skills *(e.g., eye contact, firm handshake, good posture)*

Media Texts

3.4 produce oral and/or oral-visual media texts of some technical complexity, using appropriate forms, conventions, and techniques *(e.g., produce a short educational video promoting a career in a skilled trade)*

Using Effective Presentation Skills

3.5 adapt presentation strategies according to the audience's verbal and non-verbal responses to maintain or increase effectiveness of delivery *(e.g., change the way they direct a sketch while rehearsing it, basing their adjustments on comments from actors)*

4. Reflecting on Oral and Oral-Visual Communication Skills and Strategies

By the end of this course, students will:

Metacognition

4.1 identify the strategies they found most helpful in producing and interpreting oral and oral-visual communications *(e.g., explain why writing notes while listening to an oral presentation helped them interpret its messages)*

Setting Goals

4.2 identify their oral communication strengths and weaknesses, and set goals for strengthening the areas in which they need improvement

READING AND INTERPRETATION

OVERALL EXPECTATIONS

By the end of this course, students will:

1. identify a variety of reading strategies and use them appropriately before, during, and after reading to understand ideas and information in increasingly challenging texts;
2. identify and describe the form, structure, and stylistic elements in a variety of modern literary texts from various cultures, and informational texts, including media texts, produced for a variety of audiences and purposes;
3. demonstrate a range of critical literacy skills by analysing and assessing overt and implied messages in a text, the author's use of stylistic techniques, and the perspectives presented in the text;
4. analyse their skills as readers and interpreters of texts and set goals for improvement.

SPECIFIC EXPECTATIONS

1. Comprehending and Interpreting

By the end of this course, students will:

Purpose

1.1 choose reading materials that are appropriate for an assigned purpose and adapt their reading style to suit both the purpose and the style of the texts *(e.g., skim pamphlets on a variety of apprenticeships for information on their entrance requirements)*

Demonstrating Understanding

1.2 summarize the main ideas and supporting details in texts, identifying relevant information for an assigned task *(e.g., make notes on information found on websites that is relevant to an assigned topic for a report)*

Making Inferences

1.3 develop interpretations of increasingly complex texts, using stated and implied ideas from the texts to support their interpretations *(e.g., identify bias and/or false or misleading information in a print advertisement)*

Analysing Texts

1.4 analyse the characteristics and elements of style in a variety of texts and explain how they contribute to the meaning of the text and influence the reader's reaction *(e.g., explain how the opening paragraph of a short story sets the mood for the story)*

Extending Understanding

1.5 extend understanding of texts by connecting the ideas in them to their own knowledge, experiences, and insights; to other texts; and to the world around them *(e.g., role-play their response to a critical event in a fictional text, comparing their reaction with that of the character in the text whose part they are playing)*

2. Understanding Forms and Their Characteristics

By the end of this course, students will:

Fiction/Literature

2.1 read a range of contemporary literature from different cultures (short stories, poems, plays, novels, biographies/autobiographies) and explain how the elements of stories *(e.g., plot, theme, conflict, character, setting)* and the literary/stylistic techniques *(e.g., irony, figure of speech)* work together to communicate meaning and enhance their effectiveness

Informational Texts

2.2 read a range of print and electronic reports and articles, and explain how their text patterns, text features, and other characteristics, including the following, help convey information effectively:

- presentation of information
- point of view
- level of language

- graphics
- layout

2.3 read a variety of types of correspondence *(e.g., letters, memos, complaints, orders, a request for funding, a rejection of a request for funding, forms, contracts, and e-mail)* from various print and electronic sources and explain how their text patterns, text features, and other characteristics, including the following, help convey information effectively:

- layout
- organization of information
- main and supporting information
- level of language

Persuasive Texts

2.4 read a range of persuasive texts (advice columns, opinion pieces) from various print and electronic sources and explain how their text patterns, text features, and other characteristics, including the following, help convey information effectively:

- topic sentence
- thesis statement
- structure of arguments/organization of information
- level of language
- persuasive and rhetorical devices

Media Texts

2.5 interpret a range of media texts, explaining how their elements, conventions, and techniques vary according to purpose and audience *(e.g., explain how the techniques used in a photo essay make it appealing to its target audience)*

3. Applying Critical Literacy Skills

By the end of this course, students will:

Evaluating Texts

3.1 evaluate the quality and effectiveness of a text, basing their assessment on evidence from the text, on previous knowledge, and on comparisons with other texts *(e.g., evaluate two letters to the editor on the same issue, basing their assessments on diction and on the arguments for the point of view in each of the letters)*

Assessing Information

3.2 recognize and challenge false, incomplete, or misleading information and bias, stereotypes, and prejudice in texts *(e.g., determine whether the choice of words in an advice column indicates a slanted or biased point of view)*

Production Perspective

3.3 identify who produces various media texts and determine their interests and/or perspectives, and describe how the texts both shape and reflect values, trends, and behaviour in society *(e.g., identify ways in which advertisers distort the truth in ads to appeal to potential customers)*

Author

3.4 explain how the life of an author, including his or her cultural and social background, can influence a text *(e.g., determine to what extent Robert Cormier's views on war influenced him in his shaping of the characters and events in the novel* Heroes)

4. Reflecting on Reading and Interpretation Skills and Strategies

By the end of this course, students will:

Metacognition

4.1 identify the strategies they used before, during, and after reading, and identify which of them were most helpful in interpreting texts *(e.g., explain how using highlighting, underlining, and sticky notes when reading photocopies of research materials helped them determine key information in the materials)*

Setting Goals

4.2 identify their reading and interpretation strengths and weaknesses, and set goals for strengthening the areas in which they need improvement

WRITING AND REPRESENTATION

OVERALL EXPECTATIONS

By the end of this course, students will:

1. use a variety of pre-writing strategies to generate ideas, and plan the content and organization of texts effectively and according to their purpose and audience;
2. apply strategies to select, organize, and document information for research purposes from a variety of texts and electronic resources;
3. write texts in a variety of forms and for various media, applying their knowledge of the stylistic techniques and other characteristics associated with each form;
4. revise, edit, and publish their texts to refine expression, correct errors, and present their work effectively;
5. analyse their writing and producing strategies and set goals for improvement.

SPECIFIC EXPECTATIONS

1. Developing and Organizing Content

By the end of this course, students will:

Purpose and Audience

1.1 use a variety of pre-writing strategies to determine a purpose and audience and generate topics for a text, and to develop ideas and arguments for the text and locate information that will support the ideas and arguments *(e.g., search a library's online catalogue for ideas for writing)*

Organizing

1.2 sort, classify, and order main and supporting ideas and details by manipulating and organizing them into units that could be used for writing a text *(e.g., use index cards to organize ideas and information for writing a report)*

2. Researching

By the end of this course, students will:

Planning Their Research

2.1 determine the focus of their research and develop a plan for gathering information *(e.g., develop ideas for a business plan by asking open-ended questions in an interview with a businessperson)*

Researching and Recording

2.2 locate and select research material, and summarize and/or paraphrase important ideas and information, making records of all sources in order to cite them and avoid plagiarism *(e.g., refine their list of sources for researching a business plan by eliminating any that are not relevant to the business being planned)*

Preparing an Outline

2.3 identify main and supporting ideas and information, and organize key points by determining a logical order in which to present them *(e.g., list causes and effects related to ideas or events they intend to discuss in a report as a way of determining the order in which to present them)*

Incorporating Sources

2.4 cite evidence and examples to support ideas and information *(e.g., incorporate quotations from an expert to support their argument in a persuasive text)*

Respecting Methodology

2.5 apply the basic elements of a standard method for presenting information in a text, including the title page, table of contents, and references *(e.g., use the MLA [Modern Language Association] or the APA [American Psychological Association] method for citing references)*

3. Applying Knowledge of Forms and Techniques

By the end of this course, students will:

Creative Texts

3.1 write creative texts *(e.g., one-act play, free verse, lyrics to songs)* in which they do the following:

- integrate the appropriate literary elements *(e.g., creation of atmosphere, symbolism, sensory images)*
- use figures of speech
- use an original theme

Informational Texts

3.2 write a report *(e.g., a business plan or a report on a school/local problem)* that includes the following:

- integration of research
- clear and appealing textual and visual aids *(e.g., headings, highlights, charts)* to clarify information and enhance presentation
- an introduction stating the purpose and the intended audience, and highlighting recommendations
- a body containing findings and analysis of findings
- a conclusion giving details of the recommendations

3.3 write various forms of correspondence *(e.g., letters, memos, complaints, orders, a request for funding, a rejection of a request for funding, forms, contracts, e-mail)*, focusing on the following:

- organizational elements *(e.g., heading, salutation, body, closing of a letter)*
- use of the appropriate level of language *(e.g., language indicating courtesy and encouragement in responding to a request for financial help)*
- appropriate and precise word choice

Persuasive Texts

3.4 write persuasive texts *(e.g., advice columns, opinion pieces)* that demonstrate the following:

- a developed and supported point of view
- a combination of arguments and opinions
- a call to attention in the conclusion

3.5 write clear and well-organized responses to texts under study, using the following:

- a clear opening sentence
- specific facts and examples for support, including comparisons, contrasts, explanations, and/or reasons
- an effective conclusion

Media Texts

3.6 produce media texts that have the elements, conventions, and techniques associated with their form, purpose, and audience *(e.g., create a photo essay on an issue of interest to their peers that has been discussed in class)*

4. Revising, Editing, and Publishing Texts

By the end of this course, students will:

Revising

4.1 make revisions to improve the content, clarity, and interest of their written work, and the appropriateness of its tone, using feedback from the teacher and their peers and focusing on the following:

- elimination of irrelevant details
- accuracy of information
- diction that is appropriate and words and phrases that emphasize important ideas or create an impression
- readability
- a variety of sentence types and structures
- writing techniques to achieve particular effects *(e.g., use puns in the titles of persuasive texts to get the audience's attention)*

Editing

4.2 edit and proofread their work, using a variety of reference materials *(e.g., print and online dictionaries, thesauruses, glossaries, spell-check programs)* and applying the language conventions listed on page 90

Publishing

4.3 produce final drafts, using a variety of technological resources to format their work and enhance its presentation *(e.g., integrate features such as graphics to visually enhance a report)*

5. Reflecting on Writing and Representation Skills and Strategies

By the end of this course, students will:

Metacognition

5.1 identify the skills and strategies they used in the process of writing and producing texts *(e.g., identify a skill and/or a strategy that they regularly use when writing texts and that they will be able to use in a career)*

Setting Goals

5.2 identify their writing and producing skills and weaknesses, and set goals for strengthening the areas in which they need improvement

Language Conventions

In drafting, revising, editing, and proofreading their texts, students will apply their knowledge of the language conventions appropriate for their grade. In this course, students will:

Sentence Structure

- vary the types, structure, and lengths of sentences;

Use of Verbs

- apply the rules of subject-verb agreement;
- avoid inappropriate shifts in verb tenses;

Use of Other Parts of Speech

- use pronouns, pronoun case forms, adjectives, and adverbs correctly;
- use transitional devices to connect ideas in complex sentences;

Spelling

- spell common words and specialized, workplace-related words correctly;
- use a variety of strategies to spell words correctly *(e.g., electronic resources, knowledge of common letter patterns, rules such as doubling the final consonant before adding the suffix)*;

Punctuation and Capitalization

- use periods, question marks, exclamation marks, commas, semicolons, colons, apostrophes, quotation marks, hyphens, dashes, and parentheses correctly;
- apply the rules for capitalizing place names, company and organizational names, names of buildings, elements of addresses, historical events, parts of letters, titles of books, and abbreviations.

OTHER COURSES

Canadian Literature, Grade 11

University/College Preparation **EAT3M**

This course emphasizes the study of literary texts from a variety of Canadian cultural and regional traditions. Students will analyse the forms, themes, and elements of style of a variety of literary texts from various time periods, and will respond creatively and critically to them. An important focus will be on integrating concepts and theories found in literary criticism into their own responses to texts.

Prerequisite: English, Grade 10, Academic or Applied

READING AND ANALYSING LITERATURE

OVERALL EXPECTATIONS

By the end of this course, students will:

1. read a range of Canadian literary texts from diverse cultures, regions, and time periods;
2. select, use, and adapt reading strategies to interpret the meaning of a variety of Canadian texts;
3. analyse the diverse human experiences and perspectives in Canadian literary texts to deepen their understanding and appreciation of literature by Canadian writers;
4. understand and assess elements of literary style to develop an understanding and appreciation of a variety of Canadian texts;
5. analyse their skills as readers and interpreters of texts and set goals for improvement.

SPECIFIC EXPECTATIONS

1. Variety of Texts

By the end of this course, students will:

Canadian Texts

1.1 read a range of Canadian literary texts, including novels, plays, short stories and poetry, with an emphasis on the study of particular genres, authors, themes, regions, and time periods *(e.g., read and analyse a variety of texts or excerpts from a particular author)*

Canadian Authors

1.2 identify and assess the influence of major Canadian authors from the colonial to the modern period in Canadian literature *(e.g., Archibald Lampman, Charles G. D. Roberts, Lucy Maud Montgomery, Stephen Leacock, Morley Callaghan, Sinclair Ross, Hugh MacLennan, W. O. Mitchell, Farley Mowat, Mordecai Richler, Leonard Cohen, Margaret Laurence, Margaret Atwood, Robertson Davies, Alice Munro, Marian Engel, Timothy Findley, Joy Kogawa, Carol Shields, Michael Ondaatje, Yann Martel)*

2. Reading Strategies

By the end of this course, students will:

Pre-reading Strategies

2.1 use pre-reading strategies to understand literary texts *(e.g., research regional and historical contexts before reading a novel, identify a specific purpose for reading)*

Comprehension Strategies

2.2 use a variety of strategies to enhance comprehension of a text *(e.g., interpret textual cues and organizational patterns to understand and confirm the meaning of texts)*

Using Evidence

2.3 select and use specific evidence from a text to support analysis *(e.g., paraphrase the thesis in an essay, refer to a specific passage when analysing the theme in a literary text)*

Making Inferences

2.4 make inferences and draw conclusions about the purpose and meaning of texts and complex compositional elements *(e.g., identify and describe the author's purpose in writing a text, identify symbols in literary texts)*

3. Critical Literacy

By the end of this course, students will:

Identity

3.1 analyse what the social, cultural, historical, and regional contexts of texts reveal about the evolution of the Canadian identity *(e.g., compare and contrast major themes, issues, and perspectives in literary texts from a single Canadian cultural tradition, such as Aboriginal culture or Jewish traditions)*

Influence on Authors

3.2 analyse the influences on the Canadian author related to gender, time period, culture, and politics *(e.g., determine the extent to which the life experiences of a Canadian author are exemplified in the text)*

Importance of the Text

3.3 assess the literary and socio-historic importance of a literary text and its relation to a literary movement or genre *(e.g., analyse the qualities that give international appeal to a Canadian text such as* Anne of Green Gables *or* Life of Pi*)*

Perspective of the Reader

3.4 analyse how social, cultural, and regional contexts and the perspective of various readers influence the interpretation of Canadian texts *(e.g., describe why a reader from a minority group may or may not appreciate how a certain author has portrayed a historical event)*

Perspective of the Text

3.5 question and challenge the ways in which Canadian texts have been constructed in order to present a particular Canadian viewpoint or perspective *(e.g., determine which regional or cultural positions, voices, and interests are represented or omitted from the Canadian text)*

4. Elements of Style

By the end of this course, students will:

Text Patterns

4.1 identify the organizational patterns of texts and evaluate their effectiveness in communicating meaning and enhancing the impact of Canadian texts *(e.g., identify the use of interior monologues and explain how this technique contributes to the understanding of the character)*

Diction and Syntax

4.2 describe the diction and syntax used in a Canadian literary text, and examine regional and cultural diversity in language and expression *(e.g., examine the use of regional or cultural dialect in dialogue and explain how dialect contributes to the reader's understanding of a character's identity)*

Literary/Rhetorical Devices

4.3 identify the literary/rhetorical devices used in Canadian literary texts and evaluate how effectively they help communicate meaning and enhance impact *(e.g., analyse the symbolism used in texts such as* In the Skin of a Lion *by Michael Ondaatje and* A Bird in the House *by Margaret Laurence; analyse a writer's style by evaluating the use of literary/rhetorical devices)*

5. Reflecting on Reading and Interpretation Skills and Strategies

By the end of this course, students will:

Metacognition

5.1 identify the strategies they used before, during, and after reading, and identify which of them were most helpful in interpreting texts *(e.g., explain how writing an essay about a text under study helps extend their comprehension of and appreciation for the text)*

Setting Goals

5.2 identify their strengths and weaknesses in reading and interpretation, and set goals for strengthening the areas in which they need improvement

EXPLORING AND APPLYING KNOWLEDGE OF LITERARY INTERPRETATIONS

OVERALL EXPECTATIONS

By the end of this course, students will:

1. apply research strategies independently, consulting and evaluating a broad range of print and electronic resources to extend their interpretation and analysis of literature;
2. analyse and apply interpretations of Canadian texts to enhance understanding of literary texts;
3. produce personal, analytical, and creative responses to texts under study in a variety of forms;
4. analyse their researching and writing strategies and set goals for improvement.

SPECIFIC EXPECTATIONS

1. Researching

By the end of this course, students will:

Evaluating Information

1.1 evaluate information collected from print and electronic resources for authenticity, reliability, objectivity, currency, and logic, recognizing that evidence can be interpreted from many different points of view *(e.g., recognize that certain literary criticism may be biased)*

Collecting Information

1.2 collect and synthesize information from reliable primary and secondary print and electronic resources *(e.g., eliminate irrelevant details when synthesizing information in response to a specific research question)*

Documenting

1.3 incorporate quotations and definitions of literary terms into their own written texts, avoiding plagiarism and citing sources accurately, according to an accepted system of documentation

2. Analysing and Applying Concepts and Theories

By the end of this course, students will:

Analysing Literary Interpretations

2.1 demonstrate an understanding of the concepts and terms found in literary interpretations *(e.g., read literary essays that develop and support a thesis about one or more elements of a text under study)*

Applying Concepts and Theories

2.2 apply concepts and theories in works of literary interpretations to expand their own analysis of literary texts under study *(e.g., apply concepts contained in a variety of related works of literary criticism and use prior knowledge of a writer's philosophy, such as that of Margaret Atwood in* The Handmaid's Tale, *to understand the text)*

3. Responses to Texts

By the end of this course, students will:

Personal Responses

3.1 record, in a journal maintained for this purpose, their personal responses to texts under study and those read for personal interest, responding to ideas, issues, and themes found in texts

Analytical Responses

3.2 write a research paper related to a text or an author under study *(e.g., synthesize information on a specific theme, such as identity or survival, in Canadian literature)*

3.3 write persuasive texts *(e.g., essay-type answers to questions, critical reviews)* that express and justify a point of view about an issue, topic, or text under study, supporting their thesis with relevant evidence, including specific references to texts under study

3.4 write a literary essay that conveys their interpretation of texts under study *(e.g., compare and contrast works with similar themes)*

Creative Responses

3.5 write creative texts in various forms *(e.g., an additional scene in a play, a sequel to a short story, a personal or narrative essay)*, integrating literary/stylistic devices and features of texts under study into their work

3.6 produce media texts that convey their interpretation of one or more texts under study, using the appropriate technological/media aids *(e.g., create a blog related to a text under study)*

4. Reflecting on Researching and Writing Skills and Strategies

By the end of this course, students will:

Metacognition

4.1 identify the skills and strategies they used in the process of researching and writing texts *(e.g., explain how filing their research material according to their outline made writing the research paper easier, explain how using an editing checklist helped them in the editing stage of the writing process)*

Setting Goals

4.2 identify their strengths and weaknesses in researching and writing, and set goals for strengthening the areas in which they need improvement

Communication in the World of Business and Technology, Grade 11

Open EAB3O

This course emphasizes business and technological communications for specific purposes and audiences. Students will analyse, interpret, and assess a range of specialized business and technological communications and reference material, and write effective print, oral, and multimedia business correspondence and reports, as well as practical forms of communication such as surveys and applications. An important focus will be on the effective use of technology to conduct research and to produce and enhance texts and presentations.

Prerequisite: English, Grade 10, Academic or Applied

INVESTIGATING BUSINESS AND TECHNOLOGICAL COMMUNICATIONS

OVERALL EXPECTATIONS

By the end of this course, students will:

1. identify and assess characteristics and qualities of effective written, oral, and multimedia business and technological communications in a variety of representative models;
2. demonstrate an improved understanding of business and technology by researching, synthesizing, and analysing a variety of material about business and technology, as well as related work opportunities.

SPECIFIC EXPECTATIONS

1. Analysing Models of Business and Technological Communications

By the end of this course, students will:

Print Models

1.1 read a range of teacher-selected and self-selected print models to become familiar with the forms and characteristics of business and technological communications *(e.g., business correspondence, instruction manuals, insurance reports, progress and evaluative reports, contracts, instructional videos, online tutorials, policy and procedures documents)*

Oral and Multimedia Models

1.2 interpret a range of teacher-selected and self-selected oral and multimedia models to become familiar with the forms and characteristics of business and technological communications *(e.g., interviews, press conferences, telephone messages, infomercials)*

Text Patterns

1.3 identify the organizational patterns of texts and evaluate their effectiveness in communicating meaning clearly and effectively *(e.g., determine the quality of an instructional document by examining the use of sequential order in it)*

Text Language

1.4 describe how the level of language, diction, and syntax used in a business and technological communication enhance its accuracy and clarity *(e.g., explain how the use of specialized vocabulary and acronyms contributes to the accuracy and conciseness of a memo)*

Text Features

1.5 identify the common features *(e.g., the use of formatting such as boldface fonts, illustrations and graphics, multimedia features such as animation, sound clips)* of business and technological communications and explain how they enhance their effectiveness *(e.g., explain how the use of video clips in an online tutorial enhances the clarity of the text)*

Speaking and Presenting

1.6 explain the importance of delivery and presentation *(e.g., volume, pace, pitch, eye contact, posture, appearance, mannerisms)* as characteristics of effective communications

2. Investigating the World of Business and Technology

By the end of this course, students will:

Understanding Context

2.1 read and view a variety of articles and interviews related to business and technology contexts to learn about and understand issues, innovations, organizations, and corporate culture *(e.g., watch a televised interview with a corporate leader, read an article about issues related to the use of the Internet in the workplace)*

Opportunities and Careers

2.2 explore a variety of opportunities and careers in the fields of business, technology, and research, and describe the specific skills required to pursue them *(e.g., research postsecondary and community marketing programs, invite the school's or school board's IT representative to discuss the use of electronic communication in the school environment)*

CREATING BUSINESS AND TECHNOLOGICAL COMMUNICATIONS

OVERALL EXPECTATIONS

By the end of this course, students will:

1. produce a variety of business and technological communications in a variety of written, oral, and multimedia forms for specific purposes and audiences, applying knowledge of forms and their characteristics;
2. revise, edit, and format their texts to refine and polish their work;
3. analyse their skills as communicators in business and technology and set goals for improvement.

SPECIFIC EXPECTATIONS

1. Applying Knowledge of Forms and Techniques

By the end of this course, students will:

Business Correspondence

1.1 produce a variety of business correspondence *(e.g., memos, letters of request, brochures, responses to inquiries, voice-mail messages, multimedia presentations)*, using effective text features and organizational patterns, specialized vocabulary, and an appropriate level of language, as well as effective oral presentation techniques, where appropriate

Reports

1.2 write a variety of short reports *(e.g., consumer report, progress report, evaluative report, incident report)*, using effective text features and organizational patterns, specialized vocabulary, and an appropriate level of language

Practical Forms

1.3 produce a variety of practical forms of communication *(e.g., print or online surveys, applications)*, using effective text features and organizational patterns, specialized vocabulary, and an appropriate level of language, as well as effective oral presentation techniques

2. Revising, Editing, and Publishing Texts

By the end of this course, students will:

Revising

2.1 revise content, form, organization, elements of business and technical communications, and stylistic techniques to ensure clarity, coherence, and unity, to achieve a specific purpose and to suit a specific audience *(e.g., revise vocabulary for precision and accuracy in a staff memo, incorporating specialized terms when appropriate; recognize organizational problems in progress or evaluative reports and add appropriate transitional words to ensure clarity, coherence, and unity)*

Editing

2.2 edit and proofread their drafts, using a variety of reference material *(e.g., print and online dictionaries, thesauruses, glossaries, spell-check programs)* and applying the language conventions set out on page 103

Collaborating

2.3 collaborate in the revising and editing of their own and peers' written work, including work in progress, making constructive suggestions for revision and using feedback from teacher and peers to improve their own writing *(e.g., work with a partner to identify strengths and weaknesses of a draft report, use peer conferences to provide feedback on a multimedia presentation)*

Publishing

2.4 use electronic resources effectively to format texts, to present information clearly, and to enhance the overall presentation of the final product *(e.g., select the most effective and visually attractive design features to use in a document, add sound clips to animations and charts to clarify the message in a multimedia presentation)*

3. Reflecting on Their Communicating Skills and Strategies

By the end of this course, students will:

Stylistic Choices

3.1 explain and defend their stylistic choices *(e.g., explain why they chose to present their brochure using a certain colour pattern and font style and why this was an effective way to present the information, identify which features they added to match their presentation to a target audience)*

Metacognition

3.2 identify the skills and strategies they used in the process of creating texts *(e.g., identify errors often committed in the proofreading stage and create an editing checklist that specifically addresses these common errors)*

Setting Goals

3.3 identify their skills and weaknesses as communicators, and set goals for strengthening the areas in which they need improvement

Language Conventions

In drafting, revising, editing, and proofreading their texts, students will apply their knowledge of the language conventions appropriate for their grade. In this course, students will:

Sentence Structure

- use a variety of sentence structures *(e.g., complex, compound-complex)*, using conjunctions, phrases, and clauses appropriately;
- make grammatical elements parallel in structure when using point form *(e.g., in brochures or charts)*;

Use of Verbs

- apply the rules of subject-verb agreement;
- avoid inappropriate shifts in verb tense;

Use of Other Parts of Speech

- use pronouns correctly, ensuring that they agree with their antecedents;
- use a wide variety of transitional words and phrases effectively to link parts of sentences, sentences in paragraphs, and paragraphs;

Capitalization and Punctuation

- apply the rules of capitalization correctly *(e.g., for geographical locations, names of companies and organizations, languages, buildings, addresses, titles, abbreviations)*;
- use punctuation correctly *(e.g., periods, commas, semicolons, colons, apostrophes, quotation marks, hyphens, dashes)*;
- use parentheses and square brackets correctly *(e.g., use parentheses to enclose supplementary information and square brackets to indicate additions to quoted material)*;

Spelling

- use a variety of strategies to help spell words correctly, including business and technological terminology *(e.g., use electronic resources to verify spelling; use understanding of spelling patterns and rules, such as doubling the final consonant when adding a suffix)*.

English Literature, Grade 12

University Preparation — EAL4U

This course emphasizes the critical assessment of Canadian and world literature. Students will study specific genres, authors, themes, and cultures in a range of challenging texts, and respond critically and creatively to them. An important focus will be on integrating their knowledge of literary movements, as well as concepts and theories found in literary criticism, into their responses to texts.

Prerequisite: English, Grade 11, University Preparation, or Canadian Literature, Grade 11, University/College Preparation

READING AND ANALYSING LITERATURE

OVERALL EXPECTATIONS

By the end of this course, students will:

1. read a range of literary texts from diverse cultures, regions, and time periods;
2. select, use, and adapt reading strategies to interpret the meaning of a variety of challenging texts;
3. analyse the diverse human experiences and perspectives in literary texts to deepen their understanding and appreciation of literature by writers from around the world;
4. assess elements of literary style to develop an understanding and appreciation of a variety of literary texts;
5. analyse their skills as readers and interpreters of texts and set goals for improvement.

SPECIFIC EXPECTATIONS

1. Variety of Texts

By the end of this course, students will:

Texts

1.1 read a wide range of literary texts from contemporary and historical periods, including novels, plays, short stories and poetry, with an emphasis on international authors from various countries and cultures and an in-depth study of particular genres and themes *(e.g., read a variety of texts or excerpts from authors from the same country and historical period)*

Authors

1.2 identify major international authors from diverse cultures, regions, time periods, and literary movements *(e.g., Margaret Atwood, Chinua Achebe, Jane Austen, Charlotte Brontë, Emily Brontë, Robertson Davies, Charles Dickens, Nadine Gordimer, Ernest Hemingway, Aldous Huxley, Joy Kogawa, Michael Ondaatje, Mary Shelley, John Steinbeck, Rohinton Mistry, Elie Wiesel)*

2. Reading Strategies

By the end of this course, students will:

Pre-reading Strategies

2.1 use pre-reading strategies to interpret texts *(e.g., read a work of literary criticism to gather information about the Romantic movement before reading a poem by Wordsworth, Shelley, Byron, Coleridge, Keats)*

Comprehension Strategies

2.2 use a variety of strategies to enhance comprehension of a text *(e.g., verify or confirm the meaning of literary terms and concepts by referring to print and electronic resources)*

Using Evidence

2.3 select and use specific evidence from a text to support analysis *(e.g., paraphrase main and secondary ideas, refer to a specific portion of text when analysing character development)*

Making Inferences

2.4 make inferences and draw conclusions about purpose and meaning in texts and complex compositional elements *(e.g., analyse themes and motifs in Margaret Laurence's* The Diviners*)*

3. Critical Literacy

By the end of this course, students will:

Identity

3.1 analyse the relationship between literary texts and the social, cultural, historical, and political contexts in which they were created *(e.g., explain why certain authors have been persecuted or certain works suppressed)*

Influence on Authors

3.2 analyse the influences on an author related to gender, time period, culture, and politics *(e.g., compare cultural values expressed in texts from different cultures such as British, Indian, or Caribbean)*

Importance of the Text

3.3 analyse the literary and socio-historic importance of the literary text and its relation to a literary movement or genre *(e.g., analyse the qualities that give international appeal to texts such as* The English Patient *by Michael Ondaatje or* The Handmaid's Tale *by Margaret Atwood)*

Perspective of the Reader

3.4 analyse how the perspectives of various readers influence the interpretation of literary texts *(e.g., explain why a reader's interpretation of a text is different from that of someone from a different period or culture)*

Perspective of the Text

3.5 question and challenge the ways in which literary texts have been constructed in order to present a particular viewpoint or perspective *(e.g., describe the insight into different human experiences and perspectives promoted in novels by writers such as Ernest Hemingway and Margaret Atwood, and assess the validity of these beliefs)*

4. Elements of Style

By the end of this course, students will:

Text Patterns

4.1 identify organizational patterns in literary texts, and evaluate how effectively they are used in Canadian works to help communicate meaning and enhance impact *(e.g., assess complex organizational patterns such as interior monologues and alternating points of view in short stories by Guy Vanderhaeghe, Alice Munro, Jack Hodgins, Alice Walker)*

Diction and Syntax

4.2 describe the diction and syntax used in a literary text and evaluate how effectively they help communicate meaning and enhance impact *(e.g., draw parallels between the dialect and the social status of certain characters in* Pride and Prejudice *by Jane Austen or* Angela's Ashes *by Frank McCourt)*

Literary/Rhetorical Devices

4.3 explain the literary/rhetorical devices used in texts and evaluate how effectively they help communicate meaning and enhance impact *(e.g., explain the significance or effect of elements such as alliteration, allusion, anecdote, antithesis, assonance, hyperbole, imagery, irony, metaphor, atmosphere, and onomatopoeia in the works of poetry of Robert Frost, Emily Dickinson, Robert Browning, Dylan Thomas, Alfred Lord Tennyson, Irving Layton, Michael Ondaatje, Leonard Cohen)*

5. Reflecting on Reading and Interpretation Skills and Strategies

By the end of this course, students will:

Metacognition

5.1 identify the strategies they used before, during, and after reading, and identify which of them were most helpful in interpreting texts *(e.g., explain how reading the same text more than once helps extend comprehension of and appreciation for the text)*

Setting Goals

5.2 identify their strengths and weaknesses in reading and interpretating texts, and set goals for strengthening the areas in which they need improvement

EXPLORING AND APPLYING KNOWLEDGE OF LITERARY INTERPRETATIONS

OVERALL EXPECTATIONS

By the end of this course, students will:

1. apply research strategies independently, consulting and evaluating a broad range of print and electronic resources to extend their interpretation and analysis of literature;
2. analyse, assess, and apply interpretations of literature to enhance understanding of texts under study;
3. produce personal, analytical, and creative responses to literature in a variety of forms;
4. analyse their researching and writing strategies and set goals for improvement.

SPECIFIC EXPECTATIONS

1. Researching

By the end of this course, students will:

Evaluating Information

1.1 evaluate information collected from print and electronic resources for authenticity, reliability, objectivity, currency, and logic, recognizing that evidence can be interpreted from many different points of view *(e.g., identify reliable and objective sources on the Internet)*

Collecting Information

1.2 collect and synthesize information from reliable primary and secondary print and electronic resources *(e.g., narrow topic and establish focus of research to facilitate collection of information)*

Documenting

1.3 incorporate quotations and definitions of literary terms into their own written texts, avoiding plagiarism and citing sources accurately, according to an accepted system of documentation

2. Analysing and Applying Concepts and Theories

By the end of this course, students will:

Analysing Literary Interpretations

2.1 analyse and assess the concepts and terms found in literary interpretations *(e.g., assess the validity of ideas and concepts contained in works of literary criticism, such as A. C. Bradley's analyses of Shakespeare's plays)*

Applying Concepts and Theories

2.2 apply concepts and theories in works of literary interpretations to expand their own analysis of literary texts under study *(e.g., integrate references from various sources of literary criticism to support their thesis)*

3. Responses to Texts

By the end of this course, students will:

Personal Responses

3.1 record, in a journal maintained for this purpose, their critical and creative responses to texts under study

Analytical Responses

3.2 write a research paper related to a text, a literary movement, or an author under study *(e.g., synthesize the key beliefs and style of a selected author's works, the impact of his or her writing, and the reasons for his or her enduring success)*

3.3 write a critical review of one or more texts under study *(e.g., evaluate the influence of Mordecai Richler's writing on Canadian literature and identity)*, supporting their opinions about the effectiveness of the form, content, and style of each work with relevant evidence

3.4 write persuasive texts *(e.g., essay-type answers)* conveying their analyses of issues, topics, or texts under study, and support their theses with relevant evidence, including specific references to texts under study

3.5 write a literary essay that develops and supports a thesis about one or more elements of a text under study

Creative Responses

3.6 write a variety of creative texts, using structure, diction, syntax, voice, imagery, and style to communicate meaning and enhance impact *(e.g., retell a story from another character's point of view, write a personal narrative on a theme in a novel under study, rewrite an episode in a different period or in a different style)*

3.7 produce media texts that convey their interpretation of one or more texts under study, using appropriate technological/media aids *(e.g., create a short documentary about the life, times, and impact of an author under study)*

4. Reflecting on Researching and Writing Skills and Strategies

By the end of this course, students will:

Metacognition

4.1 identify the skills and strategies they used in the process of researching and writing texts *(e.g., explain how filing their research material according to their outline made writing the research paper easier, explain how using an editing checklist helped them in the editing stage of the writing process)*

Setting Goals

4.2 identify their strengths and weaknesses in researching and writing texts, and set goals for strengthening the areas in which they need improvement

The Writer's Craft, Grade 12

University Preparation — EAC4U

This course emphasizes the knowledge, skills, and processes involved in the craft of writing. Students will analyse models of effective writing, produce a variety of creative and informational texts, assess and apply stylistic techniques, and make considered decisions for improving the quality of their writing. Extensive independent and collaborative writing activities will help students perfect their writing skills and develop their own voice. Students will also investigate publishing opportunities.

Prerequisite: English, Grade 11, University Preparation, or Canadian Literature, Grade 11, University/College Preparation

INVESTIGATING THE WRITER'S CRAFT

OVERALL EXPECTATIONS

By the end of this course, students will:

1. analyse and assess characteristics of effective writing in a variety of representative models;
2. demonstrate an improved understanding of the craft of writing by researching, synthesizing, and analysing a variety of material about writers, writing styles, and work opportunities related to the craft of writing.

SPECIFIC EXPECTATIONS

1. Analysing Models of Writing

By the end of this course, students will:

Writing Models

1.1 read a range of teacher-selected and self-selected models in various literary and informational forms *(e.g., satire, screenplays, essays, poems, short stories)* to become familiar with the art, craft, and world of writing

Elements of Style

1.2 assess the effectiveness of the writer's use of elements of style, including structure, syntax, diction, and literary and rhetorical devices, to communicate meaning and to persuade *(e.g., explain a writer's use of non-standard English for stylistic effect, analyse the content and journalistic style of a popular international columnist, assess the use of persuasive techniques and their effects on audience in negative advertisement campaigns)*

2. Understanding the Writer's Craft

By the end of this course, students will:

The Art and Craft of Writing

2.1 analyse interviews, blogs, and articles by a variety of contemporary and international writers about the craft of writing, their practices, and their beliefs about writing, to increase their knowledge of the techniques, skills and processes of writing *(e.g., read a variety of articles about and interviews with the same writer when researching the author's style of writing)*

Perspective

2.2 analyse how the social, cultural, and political context influences the production of a text *(e.g., explain why specific themes are recurrent in Canadian literature in terms of social and cultural contexts, analyse the use of the Internet as a vehicle for social and cultural expression)*

Writing as a Career

2.3 explore a variety of opportunities and careers in writing-related fields and describe the specific skills required to pursue them *(e.g., research the submission requirements for local publications and literary magazines, research postsecondary and community writing programs)*

PRACTISING THE WRITER'S CRAFT

OVERALL EXPECTATIONS

By the end of this course, students will:

1. use a variety of pre-writing strategies to generate ideas and to promote creative thinking;
2. write texts in a variety of forms, using techniques and stylistic elements appropriate for the form, purpose and audience;
3. revise, edit, and format their texts to effectively refine expression and polish their work;
4. assess their skills as writers to appreciate the growth and development of their own writing style and to identify ways to improve.

SPECIFIC EXPECTATIONS

1. Exploring Ideas for Writing

By the end of this course, students will:

Pre-writing Strategies

1.1 use information and ideas generated from independent or collaborative pre-writing strategies, research, discussion, reflection, reading and viewing to inspire the content of their writing *(e.g., use free writing to generate their own ideas for writing after a class discussion)*

Journal Writing

1.2 maintain a journal in which they regularly explore ideas, note new words and expressions, and experiment with imagery, voice, diction, and style *(e.g., write an entry about the figures of speech used in a poem they have written, explaining their choices and how they can be improved)*

2. Applying Knowledge of Forms and Techniques

By the end of this course, students will:

Persuasive/Informational Texts

2.1 write a literary essay and short critical responses *(e.g., an essay analysing one or more elements of a work of fiction; a critical response assessing the effectiveness of an author's writing style)* in which they:

- develop effective introductions and conclusions, using a variety of general statements that create interest *(e.g., anecdotes, provocative statements or statistics, startling questions or quotations)*
- integrate a range of rhetorical devices and various types of evidence to defend positions convincingly
- demonstrate analytical reasoning skills and express complex thoughts, using facts, specific examples, relevant quotations, and arguments in clear, direct language
- apply various organizational patterns to communicate ideas and information, using appropriate transitional devices to indicate progression and ensure coherence

2.2 write a variety of newspaper/magazine articles *(e.g., editorial, review, feature article)* in which they:

- apply knowledge of the structure and key elements of journalistic articles *(e.g., the hook in the review, the body developing the writer's position with valid arguments and reference to key supporting evidence, a recommendation in the conclusion)*
- use an appropriate level of language and accurate diction
- convey information accurately, using effective organizational patterns
- use a range of transitional devices to show relationships between ideas and to ensure coherence
- vary word choice and stylistic devices to suit form, to produce a specific effect, and to meet the requirements of a specific audience

Creative Texts

2.3 write a short story or part of a short story in which they:

- apply elements of form particular to the genre of short story chosen *(e.g., fairy tale, science fiction, mystery, legend, fable)*
- develop a tight narrative with a clear progression of incidents and conflict, a consistent point of view, and an emerging theme
- incorporate relevant stylistic details and vivid vocabulary *(e.g., use sensory details and imagery in description)* to establish the setting and characters
- convey the main character's feelings, thoughts, and motivations through dialogue, description, and action, varying the approach and rhetorical elements to maintain the reader's interest

2.4 write a variety of poetic forms *(e.g., ode, elegy, sonnet, free verse)* in which they:

- establish a clear progression of ideas, bringing a poem to a logical conclusion and establishing appropriate divisions when applicable
- choose appropriate vocabulary and figures of speech to achieve specific emotional, visual, or auditory effects, avoiding clichés, triteness, and generalizations

2.5 write a dramatic text *(e.g., a script for a televised drama, a screenplay)* in which they:

- develop effectively a specific situation, character, and/or theme
- integrate dramatic techniques and stylistic devices, using both written texts and live-performance or media productions of plays as models
- organize action logically, according to a specific outline

3. Revising, Editing, and Publishing Texts

By the end of this course, students will:

Revising

3.1 revise content, form, organization, and use of elements and stylistic techniques to ensure clarity, coherence, and unity, to achieve a specific purpose, and to suit a specific audience *(e.g., revise and vary sentence structures to create effect and to avoid wordiness, refine content of written work by analysing ideas and information and verifying sources)*

Editing

3.2 edit and proofread their drafts, using a variety of reference material *(e.g., print and online dictionaries, thesauruses, glossaries, spell-check programs)* and applying the language conventions set out on page 115

Collaborating

3.3 collaborate in the revising and editing of their own and peers' written work, including work in progress, making constructive suggestions for revision and using feedback from teacher and peers to improve their own writing *(e.g., use the revisions tracking function in a word-processing program)*

Publishing

3.4 use electronic resources effectively to format texts, to present information clearly, and to enhance the overall presentation of the final product *(e.g., select clear headings, incorporate charts and other visual aids, use typefaces consistently, use spacing effectively)*

3.5 choose one of their written texts and polish it for distribution to a larger audience *(e.g., in a class anthology, on a school website)*

4. Reflecting on Their Writing

By the end of this course, students will:

Stylistic Choices

4.1 explain and defend their stylistic choices *(e.g., assess their use of diction and rhetorical elements in terms of purpose and audience)*

Metacognition

4.2 identify the skills and strategies they used in the process of writing texts *(e.g., identify the brainstorming strategy they found most useful to inspire the writing of a poem)*

Portfolio

4.3 document the development of their skills as writers through samples and reflection in the portfolio *(e.g., identify their most effective/creative writing assignment and explain how it can be improved for publication)*

Setting Goals

4.4 identify their skills and weaknesses as writers, and set goals for strengthening the areas in which they need improvement

Language Conventions

In drafting, revising, editing, and proofreading their texts, students will apply their knowledge of the language conventions appropriate for their grade. In this course, students will:

Sentences/Syntax

- construct complex and compound-complex sentences correctly;
- use parallel grammatical constructions for parallel ideas;
- write clear and complete sentences, occasionally varying the order of sentence parts *(e.g., invert the order of the subject and the verb)*;
- use appositive, prepositional, and verbal phrases to achieve clarity and add variety and emphasis in written work;

Use of Verbs

- recognize the present subjunctive and past subjunctive forms of verbs and use them to express speculation, wishes, and indirect demands;

Use of Other Parts of Speech

- use pronoun case forms correctly;
- avoid gender bias when using pronouns;
- use linking words and repeat parallel phrases and structures to indicate transitions in and between paragraphs;
- use coordinating, subordinating, and correlative conjunctions correctly in a variety of sentences;

Punctuation

- use punctuation to clarify meaning, add emphasis, and for rhythm *(e.g., read written work aloud to ensure sentences are punctuated as they are intended to be heard)*;
- use punctuation correctly;
- use commas with non-restrictive clauses and contrasting expressions;
- use semicolons between independent clauses;
- use the dash to indicate a break in thought;
- use a colon at the end of the introduction to a list, after salutations, and to separate the title and subtitle of a book in a bibliographical entry;
- use single quotation marks for a quotation within a quotation, and double quotation marks for the titles of essays;
- use ellipsis dots to indicate omissions in material being quoted;
- use square brackets to indicate additions to quoted material;

Spelling

- use a variety of aids and strategies to spell words correctly *(e.g., electronic resources, knowledge of root words and spelling patterns, peer conferencing, checklist of frequently misspelled words)*.

The Writer's Craft, Grade 12

College Preparation EAC4C

This course emphasizes the knowledge, skills, and processes involved in the craft of writing. Students will analyse models of effective writing, produce a variety of creative and informational texts, identify and apply stylistic techniques, and make considered decisions for improving the quality of their writing. Extensive independent and collaborative writing activities will help students perfect their writing skills and develop their own voice. Students will also investigate publishing opportunities.

Prerequisite: English, Grade 11, College Preparation, or Canadian Literature, Grade 11, University/College Preparation

INVESTIGATING WRITING

OVERALL EXPECTATIONS

By the end of this course, students will:

1. analyse characteristics of effective writing in a variety of representative models;
2. demonstrate an improved understanding of the craft of writing by researching, synthesizing, and analysing a variety of material about writers, writing styles, and work opportunities related to writing.

SPECIFIC EXPECTATIONS

1. Analysing Models of Writing

By the end of this course, students will:

Writing Models

1.1 read a range of teacher-selected and self-selected models in various literary and informational forms *(e.g., various journalistic pieces, reports, personal essays, poems, short stories, plays)* to become familiar with the art, craft, and world of writing

Elements of Style

1.2 assess the effectiveness of the writer's use of elements of style, including structure, syntax, diction, and literary and rhetorical devices, to communicate meaning *(e.g., analyse the organizational structure of several editorials and determine which one is most effective in conveying information)*

2. Understanding the Writer's Craft

By the end of this course, students will:

The Art and Craft of Writing

2.1 analyse interviews, blogs, and articles by a variety of contemporary and international writers about the craft of writing, their practices, and their beliefs about writing, to increase their knowledge of the techniques, skills, and processes used in successful writing *(e.g., use references from a televised or Internet interview with a successful writer when analysing his or her style)*

Perspective

2.2 analyse how the social, cultural, and political context influences the production of a text *(e.g., read a short story by Bharati Mukherjee and explain how this author's immigrant experience influences her writing, read several news articles from various newspapers on the same national topic or issue and analyse how the subject is treated differently)*

Writing as a Career

2.3 explore a variety of opportunities and careers in writing-related fields and describe the specific skills required to pursue them *(e.g., research the submission requirements for local publications and literary magazines, research postsecondary and community writing programs)*

PRACTISING THE WRITER'S CRAFT

OVERALL EXPECTATIONS

By the end of this course, students will:

1. use a variety of pre-writing strategies to generate ideas and to promote creative thinking;
2. write texts in a variety of forms, using techniques and stylistic elements appropriate for the form, purpose, and audience;
3. revise, edit, and format their texts to effectively refine expression and polish their work;
4. analyse their skills as writers and set goals for improvement.

SPECIFIC EXPECTATIONS

1. Exploring Ideas for Writing

By the end of this course, students will:

Pre-writing Strategies

1.1 use information and ideas generated from independent or collaborative pre-writing strategies, research, discussion, reflection, reading, and viewing to inspire the content of their writing *(e.g., conduct a class survey to select student-generated topics for a poetry writing assignment)*

Journal Writing

1.2 maintain a journal in which they regularly explore ideas, note new words and expressions, and experiment with imagery, voice, diction, and style *(e.g., keep a list of new words and expressions to be used for a specific writing task)*

2. Applying Knowledge of Forms and Techniques

By the end of this course, students will:

Persuasive/Informational Texts

2.1 write a work-related text *(e.g., a feasibility study, a progress report/evaluative report)* that features the following elements:

- a clear introduction explaining the present situation, a description of the project, and a highlight of key recommendations
- a development presenting background information and findings, including factual information such as the problem or situation, detailed summaries, timelines, costs, the production process, and anticipated problems and their possible solutions
- a conclusion analysing the results and justifying recommendations

2.2 write a variety of newspaper articles suitable for the front page, editorial page, sports section, lifestyle section, business section, and arts and entertainment section in which they:

- use an appropriate level of language and accurate diction
- apply knowledge of the structure and key features of journalistic articles *(e.g., the getaway in an editorial, the body developing the writer's position with a combination of facts and opinions, and a call for action in the conclusion)*
- vary word choice and stylistic devices to suit form, to produce a specific effect, and to meet the requirements of a specific audience
- use a range of transitional devices effectively to show relationships between ideas and to ensure coherence

2.3 write a personal/informal essay and short opinion texts in which they:

- develop effective introductions and conclusions, using a variety of general statements that create interest *(e.g., anecdotes, provocative statements or statistics, startling questions or quotations)*
- express opinions clearly and convincingly, using appropriate evidence
- demonstrate analytical reasoning skills and expressing complex thoughts in clear, direct language
- use a range of transitional devices effectively to show relationships between ideas and to ensure coherence

Creative Texts

2.4 write a narrative *(e.g., a sequel to a short story, alternative introductions to a short story, a memoir, a screenplay)* in which they:

- develop plot, theme, setting, character, and/or relationship
- organize action logically, according to a specific outline
- focus on a specific audience
- vary word choice and stylistic devices to produce a specific effect
- apply elements particular to the chosen genre or form

2.5 write a variety of poetic forms *(e.g., ballad, free verse, fixed forms)* in which they:

- develop a theme effectively
- use a variety of figures of speech and other stylistic devices appropriate to the form

3. Revising, Editing, and Publishing Texts

By the end of this course, students will:

Revising

3.1 revise content, form, organization, and use of elements and stylistic techniques to ensure clarity, coherence, and unity, to achieve a specific purpose, and to suit a specific audience *(e.g., revise vocabulary for precision and accuracy, incorporating specialized terms when appropriate; recognize organizational problems in written texts, and revise outlines to ensure logic, clarity, coherence, and unity; further develop the setting in a story by adding more descriptions)*

Editing

3.2 edit and proofread their drafts, using a variety of reference material *(e.g., print and online dictionaries, thesauruses, glossaries, spell-check programs)* and applying the language conventions set out on page 121

Collaborating

3.3 collaborate in the revising and editing of their own and peers' written work, including work in progress, making constructive suggestions for revision and using feedback from teacher and peers to improve their own writing *(e.g., develop revising and editing checklists)*

Publishing

3.4 use electronic resources effectively to format texts, to present information clearly, and to enhance the overall presentation of the final product *(e.g., select the most effective and visually attractive design features to use in a document)*

3.5 polish one of their written texts for distribution to a larger audience *(e.g., in a class anthology, on a school website)*

4. Reflecting on Their Writing

By the end of this course, students will:

Stylistic Choices

4.1 explain and defend their stylistic choices *(e.g., explain why they used symbolism in their narrative and how it helped develop the plot)*

Metacognition

4.2 identify the skills and strategies they used in the process of writing texts *(e.g., explain how working in pairs for the revision and editing of texts is useful in improving one's writing)*

Portfolio

4.3 document the development of their skills as writers through samples and reflection in the portfolio *(e.g., identify their most effective/creative writing assignment and explain how it can be improved for publication)*

Setting Goals

4.4 identify their skills and weaknesses as writers, and set goals for strengthening the areas in which they need improvement

Language Conventions

In drafting, revising, editing, and proofreading their texts, students will apply their knowledge of the language conventions appropriate for their grade. In this course, students will:

Sentence Structure

- use parallel grammatical constructions for parallel ideas *(e.g., use same part of speech to begin each item in a list)*;
- avoid mixed constructions *(e.g., is when, is because)*, and illogical and/or confusing constructions *(e.g., double negatives)*;
- use appositive, prepositional, and verbal phrases for variety and to achieve clarity;

Use of Verbs

- apply the rules of subject-verb agreement;
- avoid inappropriate shifts in verb tenses;
- use the imperative form of verbs consistently in a list of instructions;

Use of Other Parts of Speech

- use pronoun case forms correctly;
- use a wide variety of transitional words and phrases to link parts of sentences, sentences in a paragraph, and paragraphs;
- use coordinating, subordinating, and correlative conjunctions, and other connectives correctly;

Spelling

- spell common business and technical words and literary terms correctly;
- use a variety of aids and strategies to spell words correctly *(e.g., electronic resources, peer conferencing, checklist of frequently misspelled words)*;

Punctuation and Capitalization

- use commas, semicolons, colons, apostrophes, quotation marks, hyphens, dashes, parentheses, square brackets, and ellipses correctly;
- apply the rules for capitalizing place names, company and organizational names, names of buildings, elements of addresses, historical events, parts of letters, titles of books, and abbreviations.

GLOSSARY

The following definitions and lists of examples are intended to help teachers and parents use this document. It should be noted that the examples provided are suggestions and are not meant to be exhaustive.

achievement levels. Brief descriptions of four different degrees of student achievement of the provincial curriculum expectations for any given grade. Level 3, which is the "provincial standard", identifies a high level of achievement of the provincial expectations. Parents of students achieving at level 3 in a particular grade can be confident that their children will be prepared for work at the next grade. Level 1 identifies achievement that falls much below the provincial standard. Level 2 identifies achievement that approaches the standard. Level 4 identifies achievement that surpasses the standard.

active listening strategies. Behaviour that helps a person listen intently to and understand spoken language. Examples include: facing the speaker, removing or ignoring distractions, demonstrating attentiveness (e.g., by leaning one's upper body towards the speaker), taking notes and reformulating information (e.g., by paraphrasing, summarizing), waiting to ask questions until the presentation is over or the speaker has asked for questions.

advertisement. A paid notice in the print, broadcast, or electronic media promoting a product or service, usually for sale, or an idea, position, or person (e.g., a political ad for an election campaign).

audience. The intended readers, listeners, or viewers of a particular text; the specific group at which the ideas, information, and/or message in the text are aimed. Also called *target audience*.

blog. A short form for *Web log*. An online forum where people share personal journal entries, opinion articles, and/or photographs with others on a regular basis.

characteristics of text. The typical or defining elements of a text, including the aspects of form and content that are particular to a genre and that reveal an author's purpose or intention. Examples are: the climactic order in a narrative; the return address, date, salutation, and closing typical of a business letter; the slogan, corporate logo, and visual images of an advertisement. Also called *elements of text*.

colloquialism. A word or expression that may be used in everyday conversation, but not in formal speech (e.g., *Don't have a clue*).

connotation. The association a word or phrase evokes beyond its literal (dictionary) meaning.

conventions. Accepted practices or rules in the use of spoken or written language. In the case of written or printed materials, some conventions help convey meaning (e.g., punctuation, typefaces, capital letters) and other conventions aid in the presentation of content (e.g., table of contents, headings, footnotes, charts, captions, lists, pictures, index). *See also* **text features**.

critical literacy. The capacity for a particular type of critical thinking that involves looking beyond the literal meaning of texts to observe what is present and what is missing, in order to analyse and evaluate the author's intent. Critical literacy goes beyond conventional

critical thinking in focusing on issues related to fairness, equity, and social justice. Critically literate students adopt a critical stance, asking what view of the world the text advances and whether they find this view acceptable.

debate. A formal discussion in which reasons are advanced for and against a proposition or proposal. Debaters follow rules pertaining to the order in which they present their views and rebut their opponents' views, and are subject to time limits.

descriptive text. A text that describes something or someone, providing concrete and specific details that appeal to one or more of the reader's five senses and often using figurative language.

documentary. A factual and informative account, in a film or a radio or television program, of a political, historical, or socially or culturally significant figure or event. Documentaries often consist of a narrated text accompanied by interviews, photographs, film footage, and/or sound recordings.

editing. The making of changes to the content, structure, and wording of drafts to improve the organization of ideas, eliminate awkward phrasing, correct grammatical and spelling errors, and generally ensure that the writing is clear, coherent, and correct.

elements of text. *See* **characteristics of text**.

enunciation. The clear pronunciation of words or parts of words.

essay-type response. A written response that should include the following components: a topic sentence or an introduction that refers to the question; development (body) paragraphs, usually including a quotation, relevant supporting details, or justification of an opinion; and a conclusion. Essay-type responses usually apply to questions about literature.

expository text. A form of text that is used to explain, describe, or inform.

fiction. Literary texts, especially novels and short stories, that describe imaginary events and people.

figure of speech. A word or phrase used in a non-literal way to create a desired effect (e.g., metaphor, simile, personification, oxymoron). *See also* **literary (or stylistic) device**.

five (5) W's. The five basic questions (*who*, *what*, *where*, *when*, and *why*) that provide a framework for recounting personal or factual experiences and retelling stories or events.

fluency. Ease, accuracy, and apparent effortlessness in the flow of speech or writing, usually resulting from practice and from confidence in one's mastery of a language.

form of text. A category or type of text that has certain defining characteristics. The concept of text forms provides a way for readers and writers to think about the purpose of a text and its intended audience. Examples include: story or other narrative piece, anecdote, commentary, critical review, description, instructions or procedures, account (personal or informational), transcription of or script for an interview, announcement, poetry, argument, position paper, essay, research report, television or radio script, editorial, speech, letter, minutes of a meeting, notes, jottings, poem, song text, dialogue, label, supported opinion, summary, cartoon caption, log, diary, memoir, journal, riddle, commercial, advertisement, list, survey, word web, chart.

genre. A category in which a literary or other artistic work may be included, on the basis of its style, form, or content (e.g., comedy, drama, science fiction, mystery).

graphic organizer. A visual framework that helps students organize, analyse, synthesize, and assess information and ideas (e.g., a Venn diagram, a word web, a flow chart).

inference. An interpretation made or a conclusion reached about a text by a reader, listener, or viewer using reasoning and based on stated

and implied ideas in the text and prior knowledge and experience.

intonation. The rise and fall of the voice or change of pitch that helps convey meaning (e.g., the voice rising at the end of a question).

inverted pyramid. The name used to describe a style of writing, traditionally preferred in journalism, in which the most important information is presented at the beginning of the text (represented by the wide part of the inverted pyramid), and the remaining material is presented in descending order of importance.

jargon. Another word for specialized or technical language, but one that usually carries a negative connotation. Jargon should be avoided, except in a text that is intended for an audience of people who are familiar with, and regularly use, the jargon. *See also* **specialized or technical language**.

level of language. Language that is appropriate to a specific purpose, audience, or situation. Level of language is determined by the level of formality in which a communication occurs, the relationship among the communicators, the purpose of the interaction, and the literacy of the readers or audience.

listening and speaking skills. Skills that include: determining the purpose of listening; paying attention to the speaker or performer; following directions and instructions; recalling ideas accurately; responding appropriately to thoughts expressed; judging when it is appropriate to speak or ask questions; allowing others a turn to speak; speaking clearly and coherently; asking questions to clarify meaning or to obtain more information; responding with consideration for others' feelings; using and interpreting facial expressions, gestures, and body language appropriately.

literary (or stylistic) device. A particular pattern of words, a figure of speech, or a technique used in literature to produce a specific effect. Examples include: rhyme, parallel structure, analogy, comparison, contrast, irony, foreshadowing, allusion, juxtaposition, simile, metaphor, personification, pun, hyperbole, oxymoron, symbolism. *See also* **figure of speech**.

literary text. Examples include: story, short story, adventure story, detective story, fable, myth, legend, folk tale, poem, novel, mystery novel, historical novel, fantasy novel, science fiction novel, play, script.

media. The plural of *medium*. A medium is a means of communication. Examples include: print, radio, television, the Internet. *Mass media* refers to the means of communication for a text aimed at a very large audience.

media text. A text that is communicated through a medium. Examples include: advertisement, e-mail, film, video, DVD, clothing, athletic wear, food packaging, action figure, jewellery, newspaper, magazine, brochure, movie trailer, editorial, sculpture, song, dance, news report, sports program, documentary, situation comedy (sitcom), television or radio drama, nature program, interview, travelogue, television commercial, cartoon, web page, CD-ROM dictionary, interactive software, multimedia text, blog, database.

metacognition. The process of thinking about one's own thought processes. Metacognitive skills include the ability to monitor one's own learning.

modelling. A demonstration by the teacher of how to perform a task or use a strategy. Students copy the teacher in order to learn the modelled processes and skills. Modelling may include thinking aloud, to help students become aware of the processes and skills involved.

multimedia presentation. A single work that uses more than one medium to present information and/or ideas: for example, an oral report that includes a slide show, diagrams, and a video or audio clip.

narrative text. A text that recounts events or tells a story. Examples include: short story, novel, personal narrative. Plays and poems that focus on plot and action can also be narrative texts.

non-fiction. Literary texts other than fiction. Examples are: diary, journal, travelogue, essay, report, article, autobiography, biography, reference book.

oral communication. Examples include: greeting, conversation, question, statement, exclamation, instructions, directions, poem, rhyme, song, rap, story, anecdote, announcement, news broadcast, interview, oral presentation, speech, recitation, debate, report, role-play, drama.

oral-visual communication/presentation. Any form of oral communication that includes visual and/or multimedia elements.

organizational patterns of text. Ways in which texts are structured in different forms or genres of writing. Examples include: time order or chronological order (events presented in time sequence); comparison and contrast (an outline of similarities and differences); cause and effect (an outline of events or actions linked to their consequences); generalization (general statements supported by examples); combined/multiple orders (two or more organizational patterns used together: for example, comparison/contrast and cause/effect). Also called *text patterns*.

pace. The rate at which an activity such as speaking or reading proceeds.

persuasive or argumentative text. A text in which the speaker, writer, or producer attempts to convince his or her audience of an idea or point of view by presenting a combination of facts and opinions and, in visual versions of the form, elements such as graphics and pictures that are intended to enhance the persuasiveness of the text (e.g., photographs that appeal to the viewer's emotions).

pitch. The level (i.e., high, low, somewhere between high and low) of a sound or tone.

point of view. An opinion about or attitude towards a subject that may be stated or implied in a text. Examining a writer's/producer's point of view often reveals an underlying set of values or a bias. *Point of view* is also a literary term used for the position of the narrator in relation to a story; thus, the vantage point from which events are seen (e.g., omniscient, third-person, or first-person point of view).

print and electronic resources. Information and reference material in print or electronic media. Examples include: dictionaries, thesauruses, atlases, and encyclopaedias, including those on CD-ROMs; databases; spell- and grammar-check programs and computer-graphics programs; models for writing (e.g., stories or essays by published writers) and style guides; books (fiction and non-fiction), newspapers, magazines, and reports; television programs, audio and video recordings, and films.

process approach (oral presentation). Developing and delivering an oral presentation by following a process, independently or collaboratively, that comprises several stages: generating ideas (e.g., through discussions, brainstorming); planning (e.g., preparing an outline, selecting an appropriate method of delivery); reviewing material (to ensure that it is organized logically and functions as a unified whole, and that the form of delivery chosen is appropriate); rehearsing (e.g., into a tape recorder, in front of a mirror, in front of family or friends), evaluating feedback from anyone who has witnessed the rehearsal, and making changes where necessary; delivering the presentation (interacting appropriately with the audience and capturing and maintaining audience interest); and reflecting on and evaluating one's own performance and constructive feedback from the audience.

proofreading. The careful reading of a final draft of written work to eliminate typographical errors and to correct errors in grammar, usage, spelling, and punctuation.

reading strategies. Approaches used before, during, and after reading to figure out unfamiliar words, determine meaning, and increase understanding of a text. Examples include comprehension strategies and word-solving strategies. Good readers use a combination

of these strategies, while maintaining a focus on developing and deepening their understanding of a text.

research report. An oral or written text that presents a topic or thesis, summarizes and analyses ideas and information about the topic or thesis that have been collected from print and electronic resources (documenting the sources), and presents the speaker's or author's conclusions.

revising. The process of making major changes to the content, structure, and wording of a draft to improve the organization of ideas, eliminate awkward phrasing, correct errors, and generally ensure that the writing is clear, coherent, and correct. *See also* **editing, proofreading, writing process**.

rhetorical devices and techniques. Elements of style used in speech or writing to achieve special effects, usually in order to persuade, interest, or impress an audience (e.g., rhythm, repetition, rhetorical question, emphasis, balance, dramatic pause).

script. The written text of a skit, play, television or radio program, or movie.

specialized or technical language. Words and phrases that have a particular meaning because of the context in which they are used or that are specific to a trade or profession (e.g., film-making terms such as *close-up* and *fade-out*). *See also* **jargon**.

strands. The three major areas of language use into which the English curriculum is organized: Oral and Oral-Visual Communication, Reading and Interpretation, and Writing and Representation.

style. The specific expressive and aesthetic ways in which an author, speaker, or performer conveys ideas. Elements of style include diction, figurative language and other literary (or stylistic) devices, sentence and paragraph structure, tone, and point of view.

target audience. *See* **audience**.

text. A means of communication that uses words, graphics, sounds, and/or images in print, oral, visual, or electronic form, to present information and ideas to an audience.

text features. The physical and design characteristics of a text that clarify and support the meaning of the text or that help readers and viewers locate the information they want in a text (e.g., title, table of contents, headings, subheadings, bold and italic fonts, illustrations, sidebars, text boxes, glossary).

text patterns. *See* **organizational patterns of text**.

thesis. The proposition put forward by a writer of a non-fiction text, for example, in an essay. The thesis usually appears at the beginning of a work and is then developed or proved by the author in the text that follows.

tone. A manner of speaking or writing that reveals the speaker's or author's attitude towards a subject and/or audience.

topic sentence. The sentence in a text or in a section or paragraph of the text, often placed at the beginning, that states the main idea or thesis of the text, section, or paragraph.

transitional device. A writing strategy that enhances coherence and unity. Examples are: an adverb or phrase that indicates a logical connection between two sentences, ideas, or paragraphs (e.g., the conjunctive adverb *however* between two independent clauses; numerical adverbs such as *first* and *second*); repetition of a key idea.

visual and/or multimedia aids. The means of producing particular effects using voice, images, and sound to support the messages or themes in a text. Examples include the use of: colour, voice-over narration, animation, simulation, variations in camera angles or distance, fading in and out of sounds or images, hot links and navigation buttons on a website, live action, special effects, variations in speed or pace, motion, flashbacks, collages, dialogue, variations in size and type of lettering or size of images, sequencing of sounds and images,

speech, music, background sounds, sound effects, volume, dialects and accents, silence, narration, graphics, symbols, logos, props (e.g., costumes, furnishings), aspects of design and layout, credits, details of sponsorship.

writing process. The process involved in producing a polished piece of writing. The writing process comprises several stages, each of which focuses on specific tasks. The main stages of the writing process are: planning for writing, drafting the text, revising, editing, proofreading, and publishing.

The Ministry of Education wishes to acknowledge the contribution of the many individuals, groups, and organizations that participated in the development and refinement of this curriculum policy document.

Imprimé sur du papier recyclé

07-031
ISBN 978-1-4249-4744-7 (imprimé)
ISBN 978-1-4249-4745-4 (PDF)
ISBN 978-1-4249-4746-1 (TXT)

© Imprimeur de la Reine pour l'Ontario, 2007